Fast detectors and cameras

January 2013 – December 2016 contract

Philippe Feautrier – CNRS/IPAG

philippe.feautrier@obs.ujf-grenoble.fr

New WP2 Organisation (after budget cut)

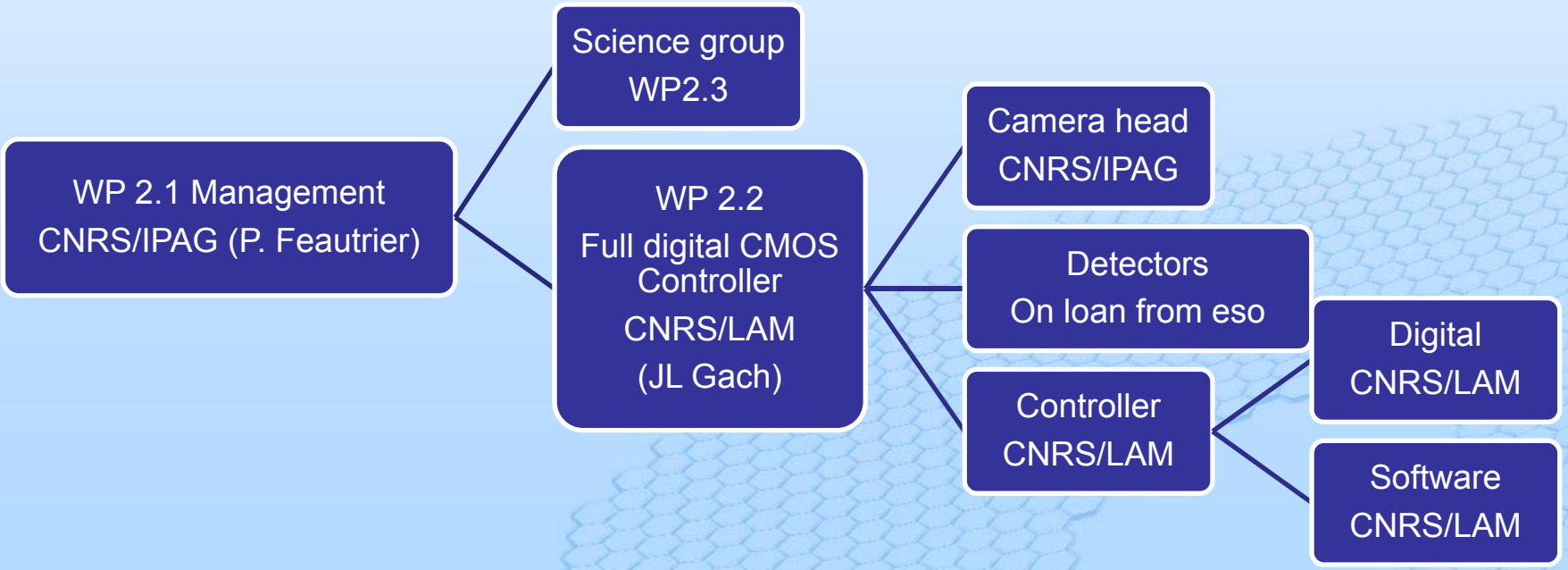

Main goals of WP2 in FP7-2

- Follow NGSD production and test by e2v
- Build camera system for use of the NGSD on a telescope
- Camera technology transfer to industry for use by the astronomical community

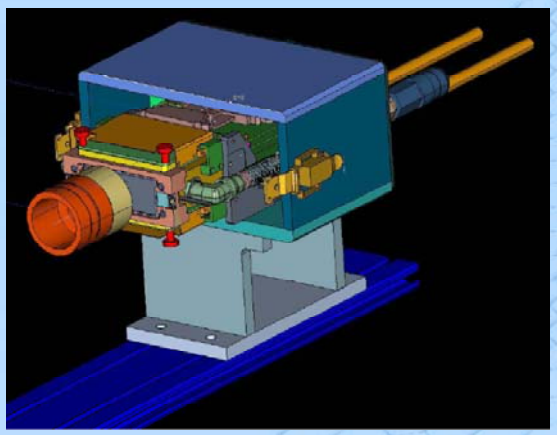

www.firstlight.fr

FIRST LIGHT

~ 10 systems sold so far in one year…

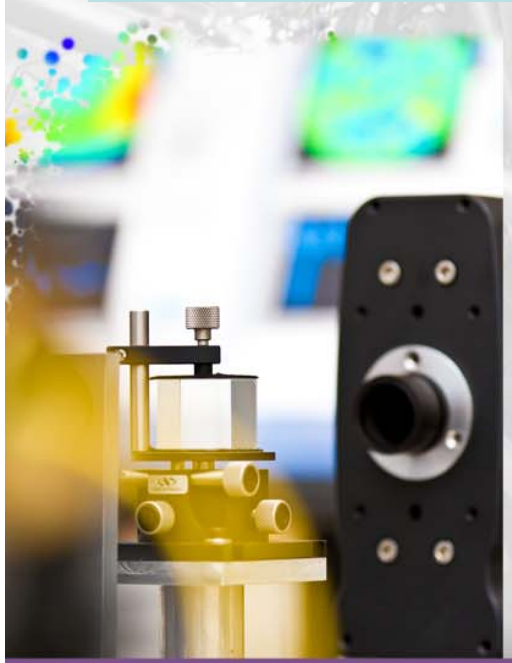

7 employees ~ 1M€/yr turnover

First clients:

- ESO
- Research School of Astronomy & Astrophysics (RSAA), Australian National University
- GMT
- Grantecan (Canary)
- Several solar telescopes in China or research labs (Yunnan Astronomical Observatory, Changchun Institute of optics…)
- Contacts with almost all big telescopes in the world (Subaru, Gemini)

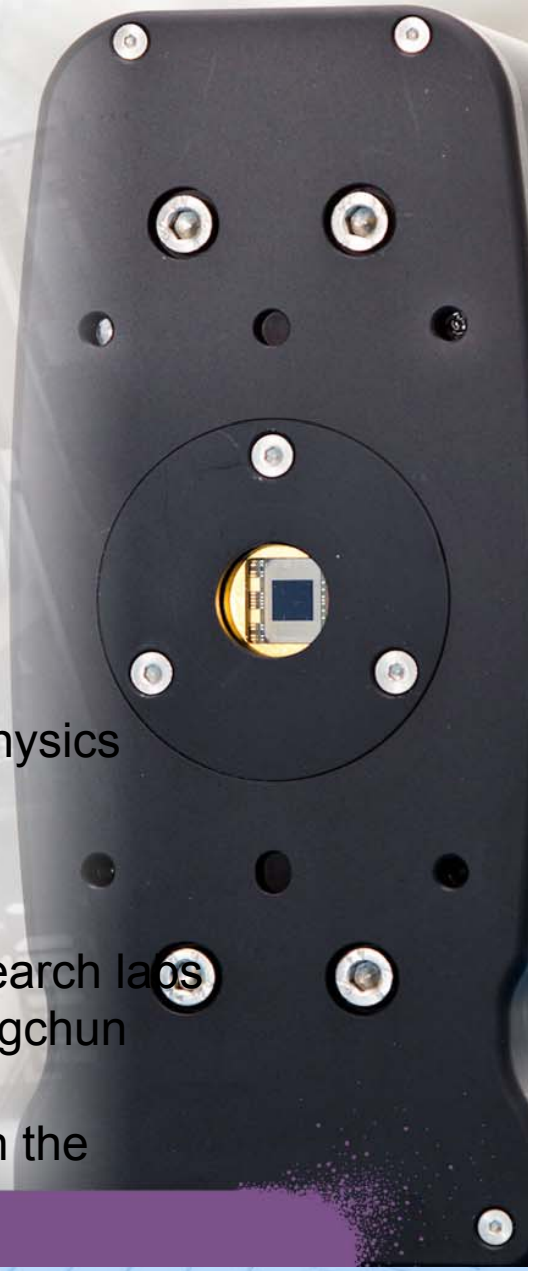

WP2.1 Management

- Scope : management of the WP Fast Detectors and Cameras.
- Lead : CNRS/IPAG – P. Feautrier
- CNRS/IPAG will coordinate the WP2 activity, prepare the key specifications for the other WPs, monitor the WPs, organize study and design reviews, prepare the regular reports and detailed work plans for the OPTICON management.

WP2.2 All-Digital C-MOS Controller

Goal of the WP: build and industrialize an all-digital CMOS controller for new generation of CMOS WFS detector dedicated to LGS AO. Finish NGSD development

- Finish NGSD development (science grades devices, package)
- The new CMOS detector developed in the framework of the FP7 WP2 call 1 allows for an all-digital controller.
- The goal of this WP is also to build a commercially ready controller to be used with the LGS detector developed in WP2 FP7 Call 1.
- This controller will be the baseline for using on the future giant telescopes of the world.
- This controller will be industrialized at the end of FP7 by the First Light spin off for access by the astronomical community and for opening new markets outside astronomy.

Partners:
CNRS/IPAG: lead, mechanical/cooling design, testing
CNRS/LAM: partner, electronics design lead
CNRS/OHP: partner, electronics design
Although ESO receives no funds, ESO will still remain in science group to follow the activity
~~e2v technology UK (industry): detectors manufacturer~~

NGSD development

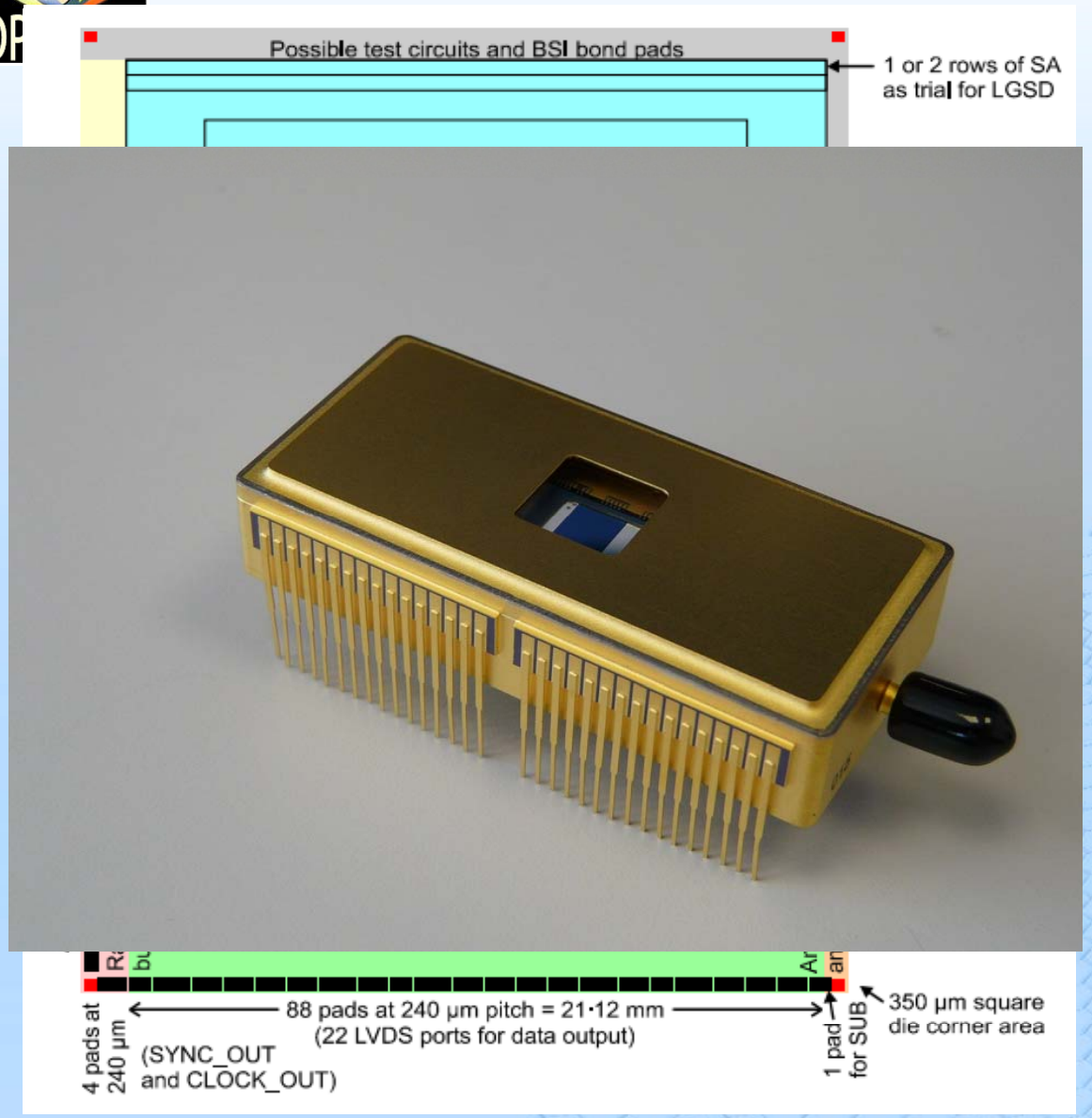

- 880 x 840 CMOS pixels (840x840 sensitive)
- 700 Hz frame rate RON<3e
- Back side illuminated for high QE
- Fully digital outputs
- Simple ceramic packaging
- Devices delivered early 2014

WP 2.2 Controller design

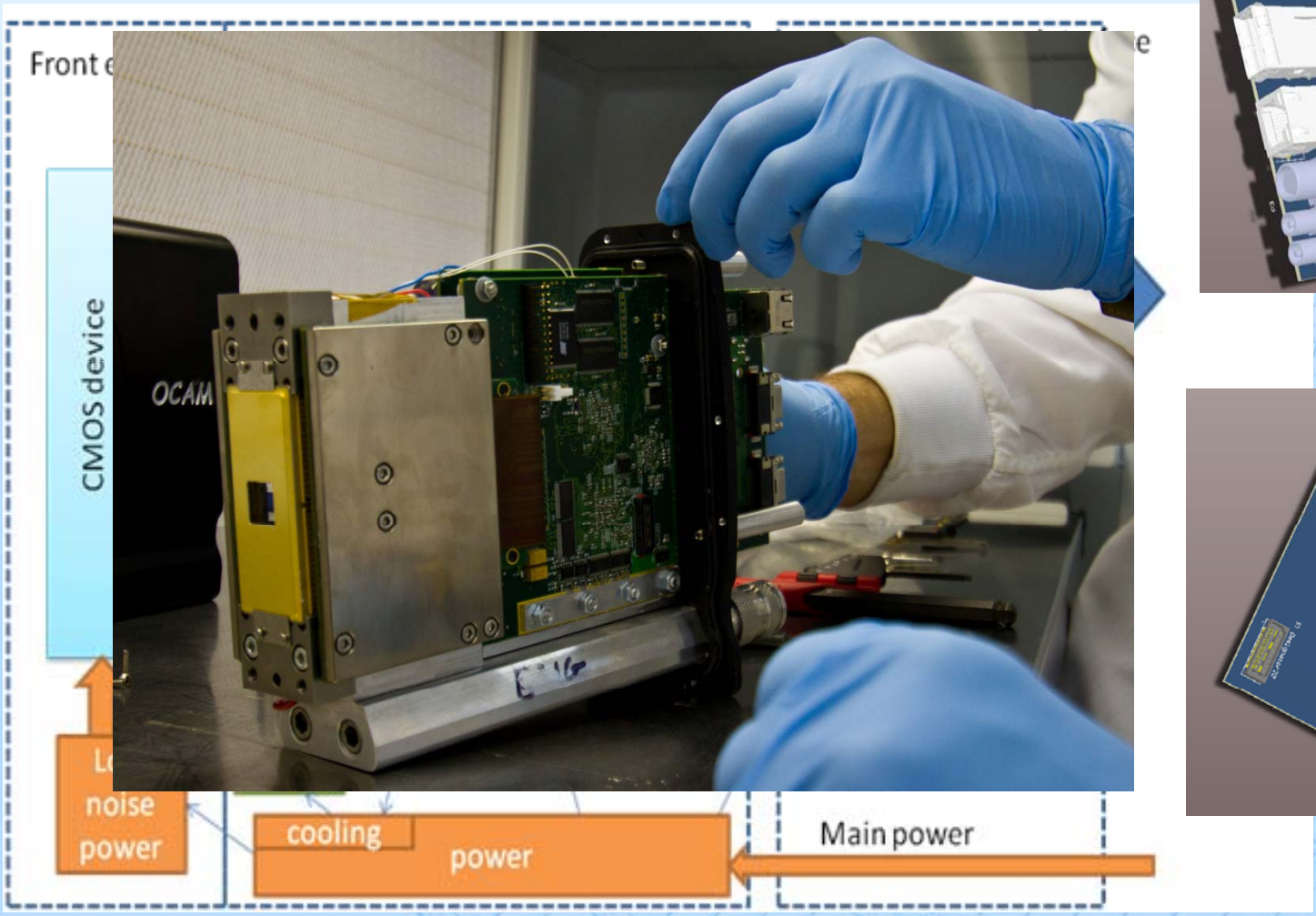

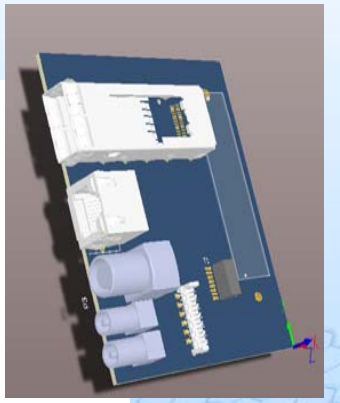

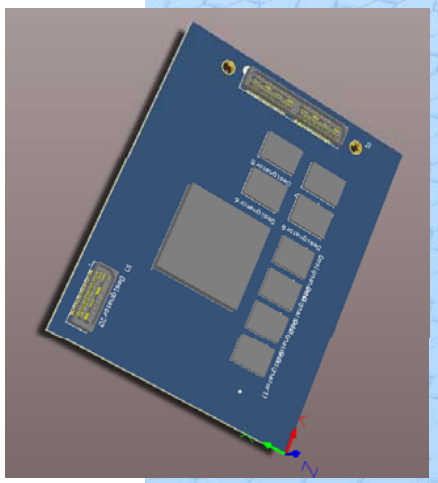

WP 2.2 Camera head design

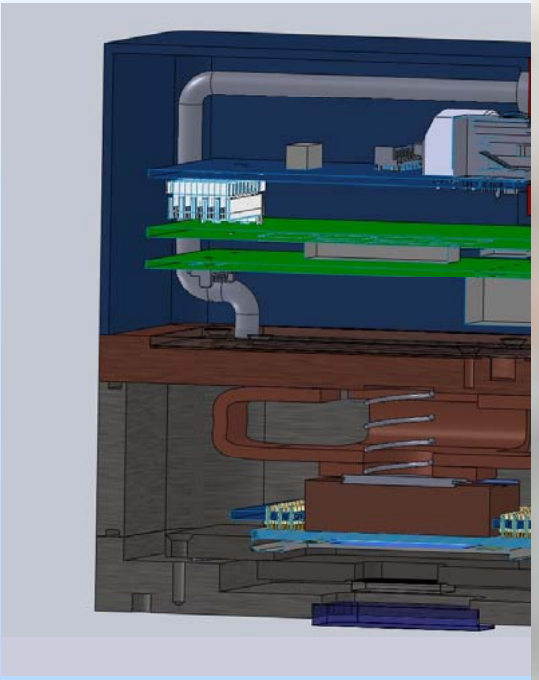

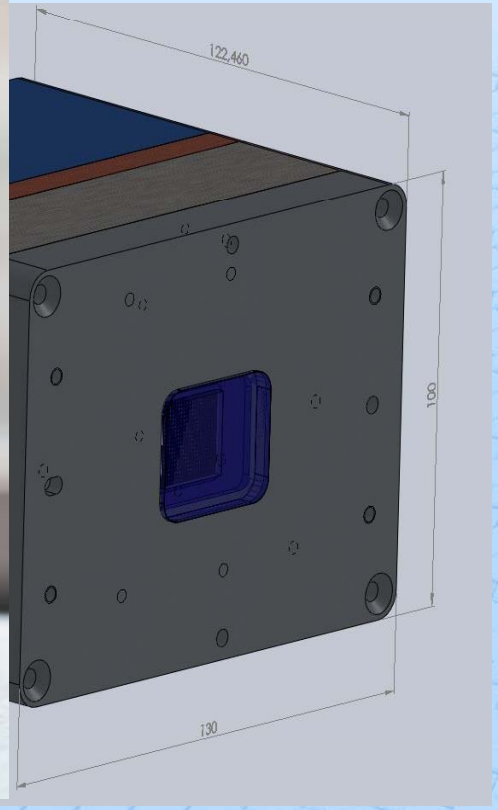

List of deliverables

Deliverable number	Leader	Deliverable title	Delivery date
D2.1	CNRS/IPAG	NGSD imaging system specification and design document	12
D2.2	CNRS/LAM	Natural Guide Star Imaging system design progress report	30
D2.3	CNRS/IPAG	Natural Guide Star Imaging system design progress report	48

WP2 funding for WP7-2

EC contribution:
260 k€? 300k€?

	STAFF	OTHER	SUB-CONTRACT	OVERHEAD	ACCESS	TOTAL	EC TOTAL
WP1	1,424,061.00	344,311.00	116,000.00	937,299.00	0.00	2,821,671.00	1,939,390.00
WP2 (Detectors)	189,802.00	26,864.00	0.00	135,529.00	0.00	352,195.00	260,000.00
WP3 (Photonics)	246,354.00	128,645.00	0.00	225,000.00	0.00	599,999.00	450,000.00
WP4 (Interferom)	460,340.00	165,070.00	0.00	137,583.00	0.00	762,993.00	582,000.00
WP5 (Active Mirrors)	278,778.00	137,863.00	0.00	257,237.00	0.00	673,878.00	499,969.50
WP6 Gratings etc)	358,621.00	108,045.00	0.00	283,970.00	0.00	750,636.00	560,000.00

Unfortunately WP2 has been the major “contributor” to the budget cut although excellent evaluation by EU…

~~TOTAL EC FUNDS CONTRIBUTION = 1000 K€~~

260 K€ = 74% BUDGET CUT !

Although WP2 is clearly highlighted by EU reviews (with others)…

FP7-2 proposal evaluation form:

Innovation is included as a follow-up of the successful KTN. In the previous project, one of the developments towards the laser guide star adaptive optics, OCAM, won a major prize for innovation, showcasing consistently excellent performance in instrumentation development in this proposal. This technology is still used in the VLT AO instruments, and an upgrade is sought in WP2.2. The pan-European networking activities in hardware development, training and

Innovation is now a key priority for EU

Conclusions for WP2 in FP7-2

- World leadership of this research thanks to Opticon and EU
- Strong success of FP6/FP7 activities, technology used on all European telescopes, creation of a spinoff First Light Imaging thanks to Opticon.
- FP7-2: continue technological innovation to reinforce European leadership on large Fast Detectors for Laser Guide Stars, prepare industrialisation for camera production run through the First Light spin off.
- The current plan is focused on ELT AO detectors but industrial transfers, research and innovation is a key point of WP2
- Unfortunately WP2 suffered from the biggest “contribution” to the “budget cut” during contract negotiation (74% cut).
- Involvement of e2v no more possible with such budget cut, although strong motivation from this well known industrial partner.
- This looks in contradiction with EU wish (see H. Crutzen Horizon 2020 presentation “Fostering innovation for RI…”). Did we go into the good direction for the future of Opticon?