JRA1: 2nd generation Adaptive Optics for 8-10m class Telescopes
18 months status report

N. Hubin

European Southern Observatory

JRA1 Charter

DESIGN THE NEXT GENERATION OF ADAPTIVE OPTICS SYSTEMS FOR THE CURRENT EUROPEAN TELESCOPE FACILITIES

DEVELOP THE KEY TECHNOLOGY ENABLING THE CONSTRUCTION OF THESE SYSTEMS

WP 2.1: VLT Planet Finder status

INSU ***ETH Zurich***

- 2 competitive conceptual design studies: **2 x 135 k€**
- Concepts evaluated end of 2004=> INSU leader
- Merging of the AO concept and differential imager of INSU with the Integral Field spectrograph of INAF and the differential polarimeter (ZIMPOL) of ETH Zurich
- Consolidated concept to be presented end of 2005 for decision

WP 2.1: VLT Planet Finder Science requirements

- Gain up to 5 magnitudes in contrast compared to present instrumentation
  - ✓Planet magnitude up to ~21-25
- Explore the separation range 0.1 – 3"
  - ✓Planet distance 0.5 – 150 AUs
- Explore a large target sample, including low mass stars and young stars -> mH < 8 (mV < 11)
- Allow some spectral characterization
  - ✓R > 50, range 0.96 – 2.32 microns
- Allow polarimetric measurements (2nd priority)

WP2.1 Science driven concept

- High contrast detection capability
  - ✓ Extreme AO (SR ~ 90% in H band)
  - ✓ Coronagraphy (dynamics at short separatio
  - ✓ Differential imaging (residual halo)
  - ✓ System optimized to maintain the calibratio

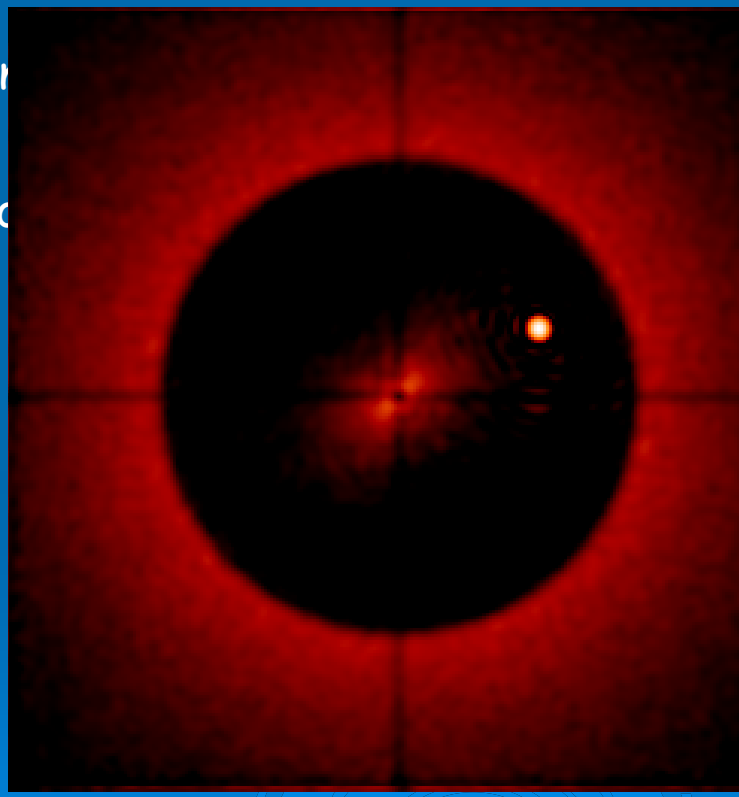

- Characterisation
  - ✓ Integral Field Spectroscopy
- Visible Channel
  - ✓ Imaging / Polarimetry (SR 90% in H → 65% in R)

WP 2.1 VLT Planet Finder conceptual design

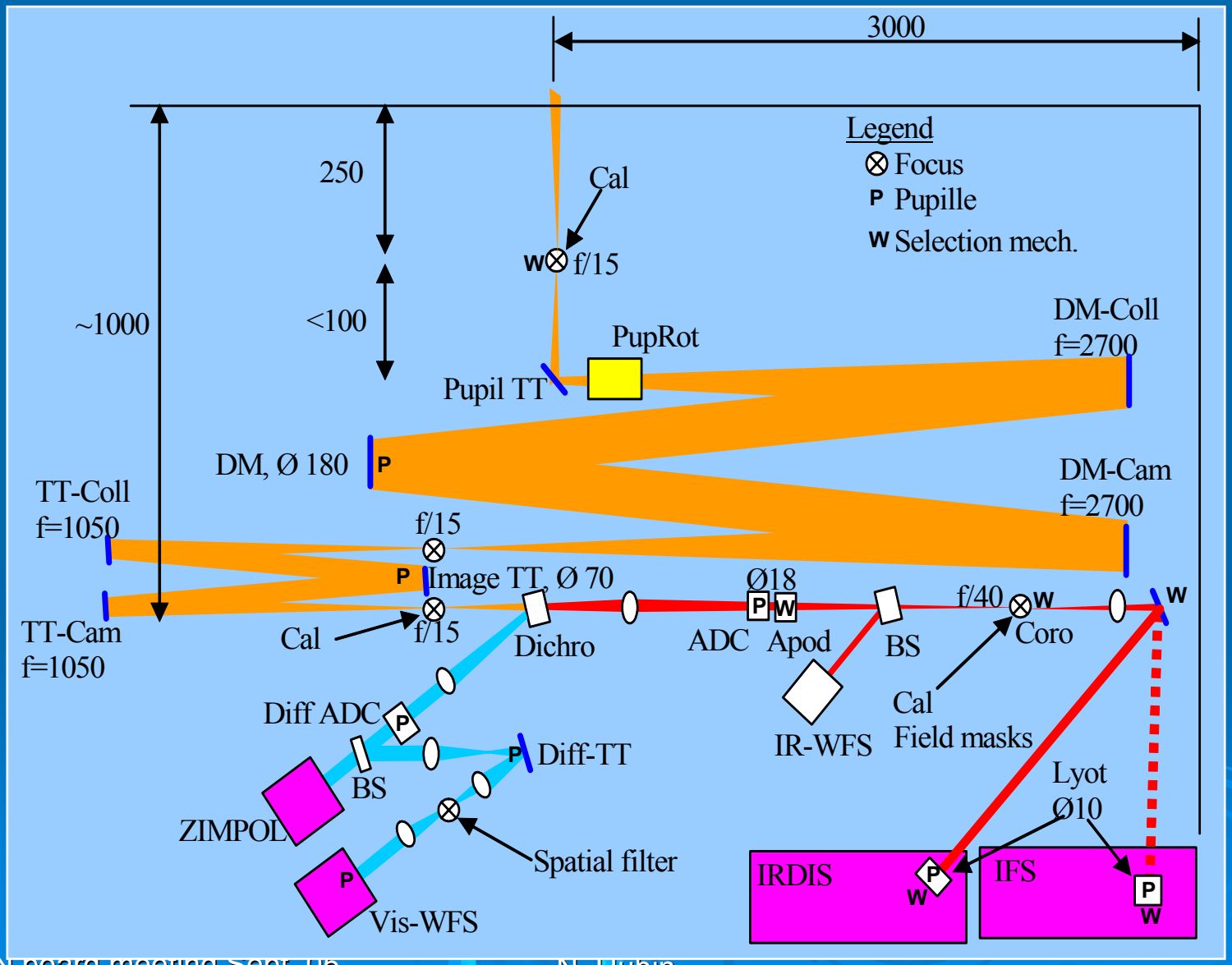

WP 2.2: GLAO design status

- Two conceptual designs of Ground Layer AO dev.
- GALACSI: GLAO-MUSE; 1’ visible 3 D spectrograph
- GRAAL: GLAO-HAWK-I; 10’ field NIR imager
- Two conceptual design reviews conducted

WP 2.2: GALACSI for MUSE: GROUND LAYER AO

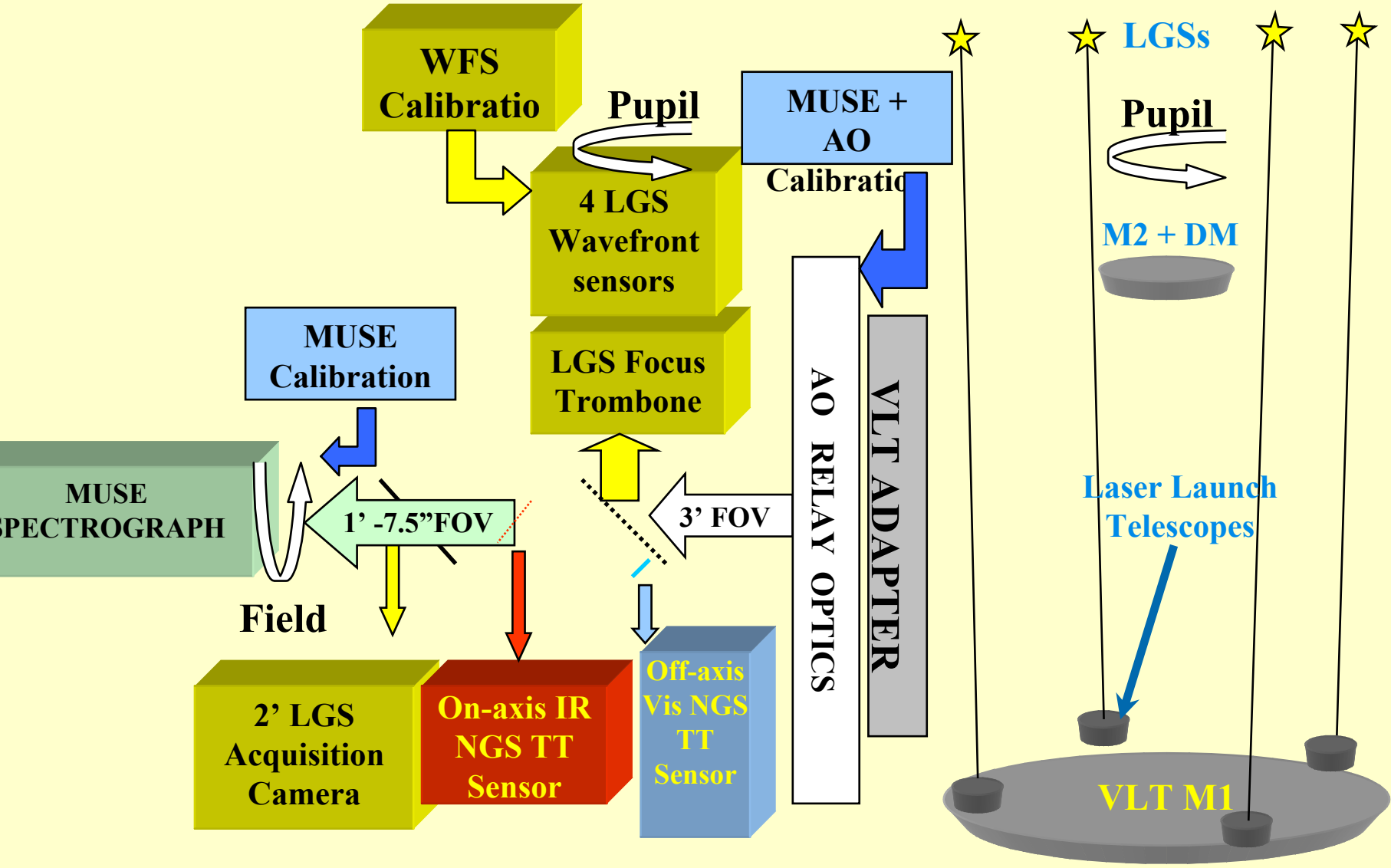

GRAAL on-sky guide stars geometry

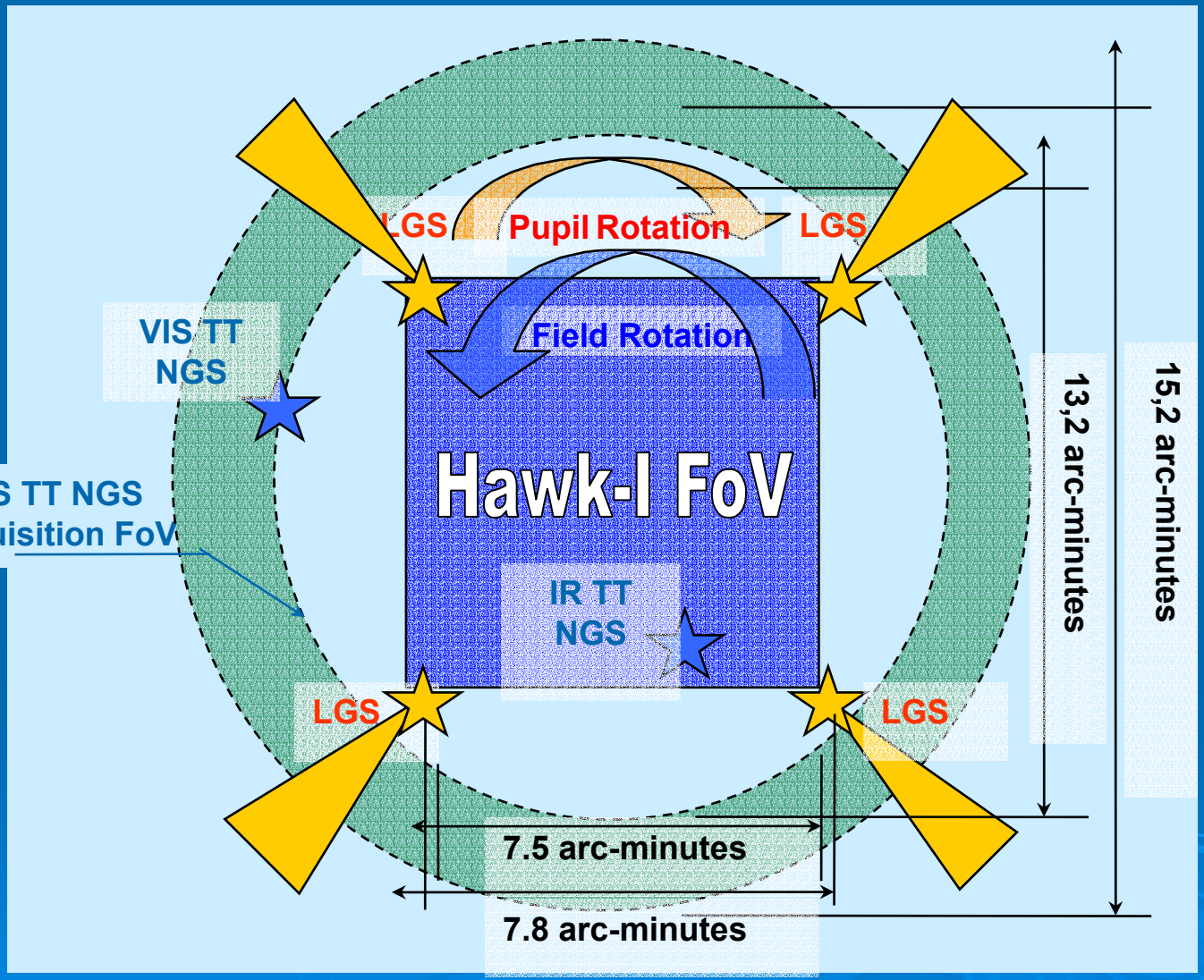

WP 2.2: GALACSI & GRAAL Concepts

GALACSI (MUSE-AO)

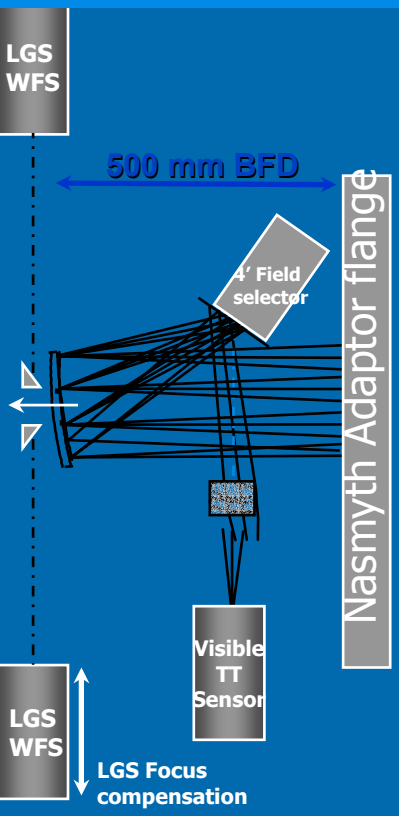

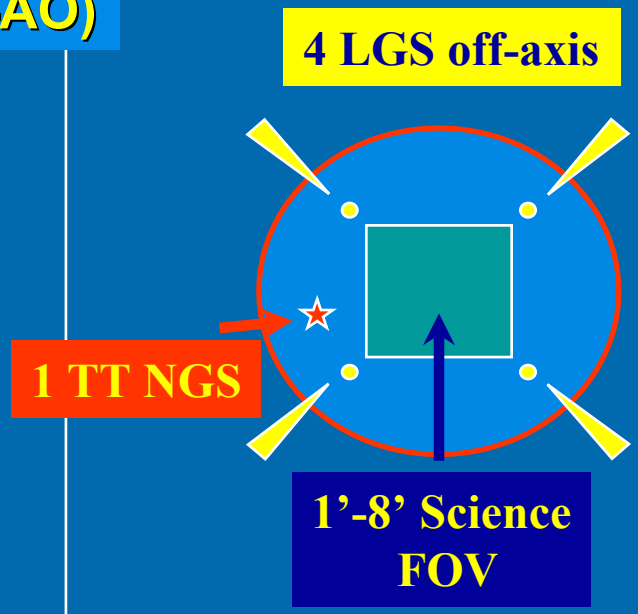

4 WFS with 32x32 subap.
1 TT sensor in VIS
RTC based on SPARTA
4 Laser Guide Stars
Deformable M2

GRAAL (HAWK-I -AO)

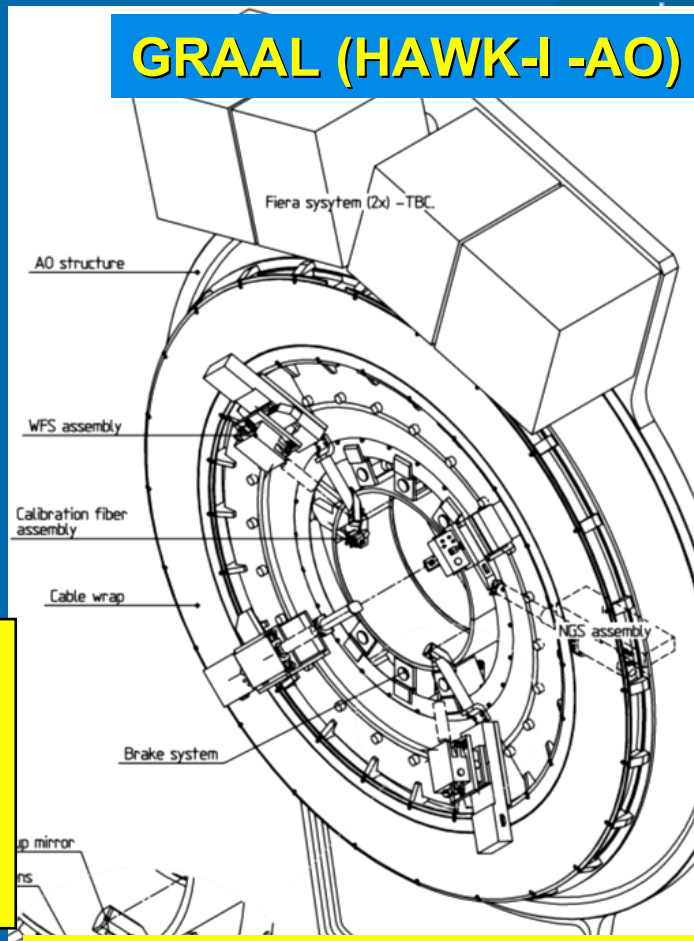

MUSE: IFS 90k spaxels,
0.45-0.95µm
2xEE in1' FOV (650nm)
On-axis Diffraction (750 nm)

Hawk-I: Imager 4k^2,
1.0 - 2.5 µm
2xEE in FOV 7,5'x7.5'
Uniform PSF over field

N. Hubin

WP 2.2: GALACSI mechanical concept

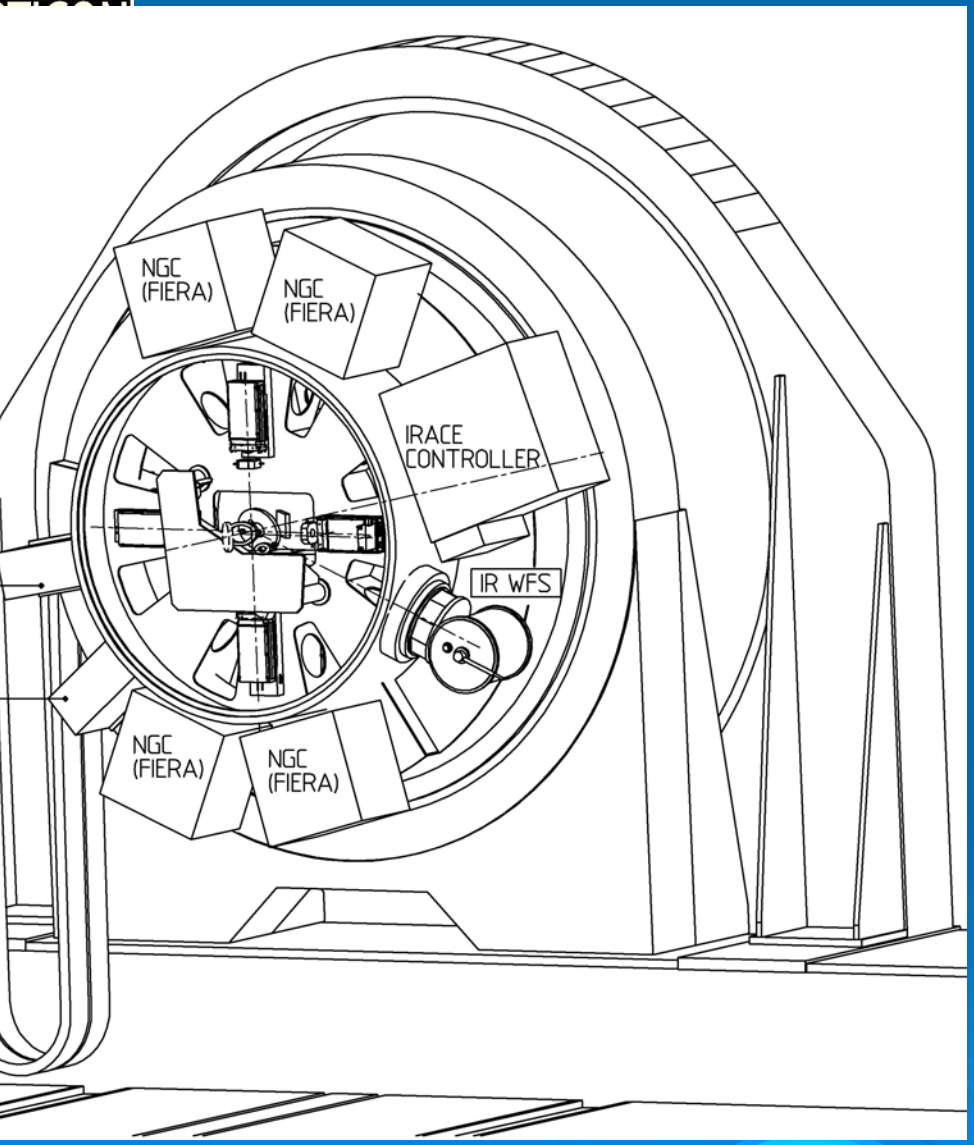

- On Nasmyth Rotator
- Pupil de-rotation
- Integrated package:
  - All AO elements included
  - All controllers on the rotator
  - No mechanical connection with MUSE Instrument
  - Metrology for alignment/vibration MUSE-GALACSI

WP 2.4: Wavefront sensing for GTC

- Pupil plane curvature sensing with multiple references for GTC
- Simulation conducted and first concept provided
- On- axis L3 CCD based WFS more appropriate for GTC mid term need => new end-delivery will be the prototype WFS and test report of an on-axis WFS

WP 2.3: GTC AO design & its WFS

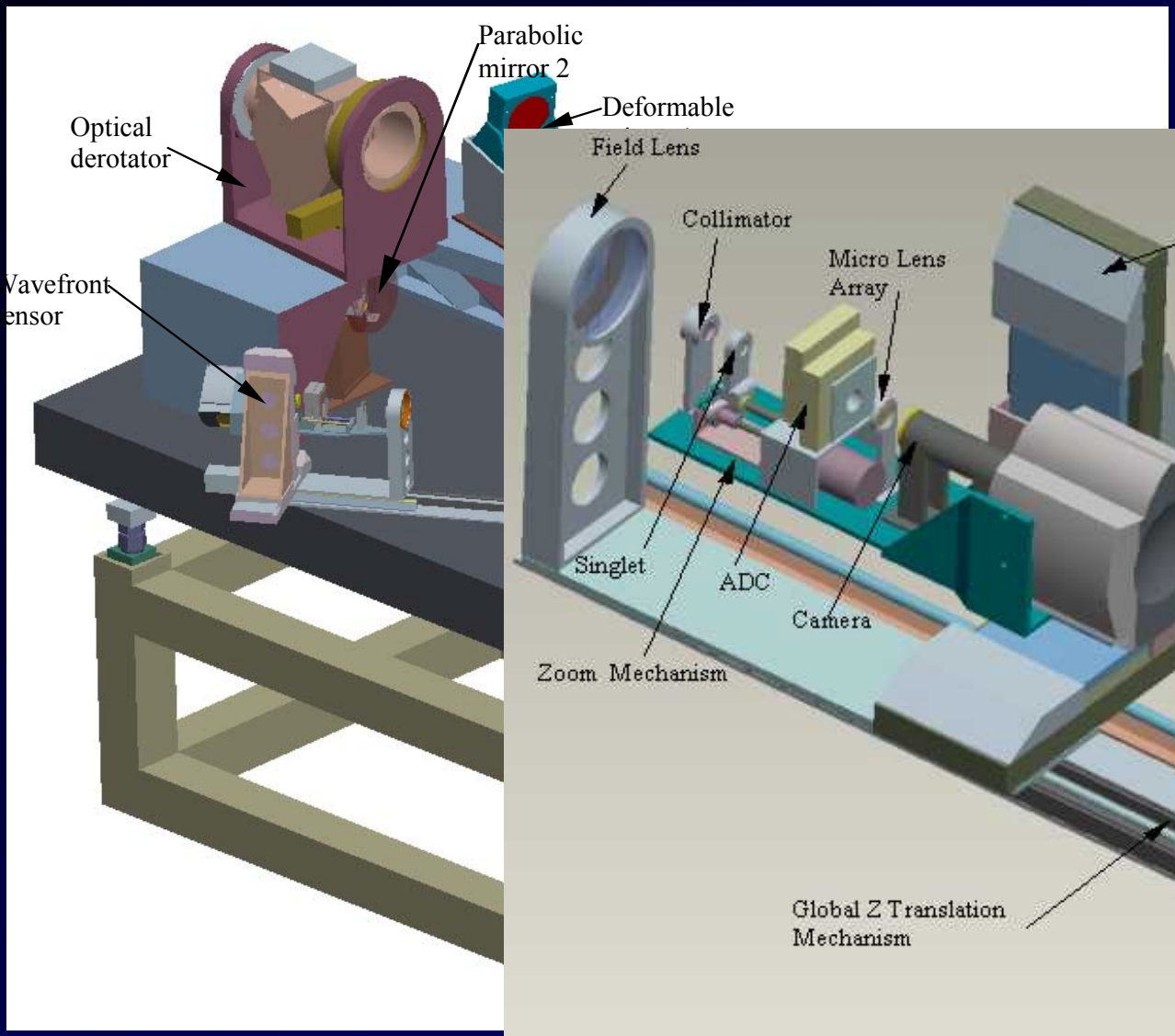

WP 2.4: LBT Multi FoV WFSs

- Multiple FOV WFS is part of LINC-NIRVANA for LBT
- Final design of LINC-NIRVANA completed
- Multiple FoV WFS is being manufactured

WP 2.4: LBT Multiple FoV WFS

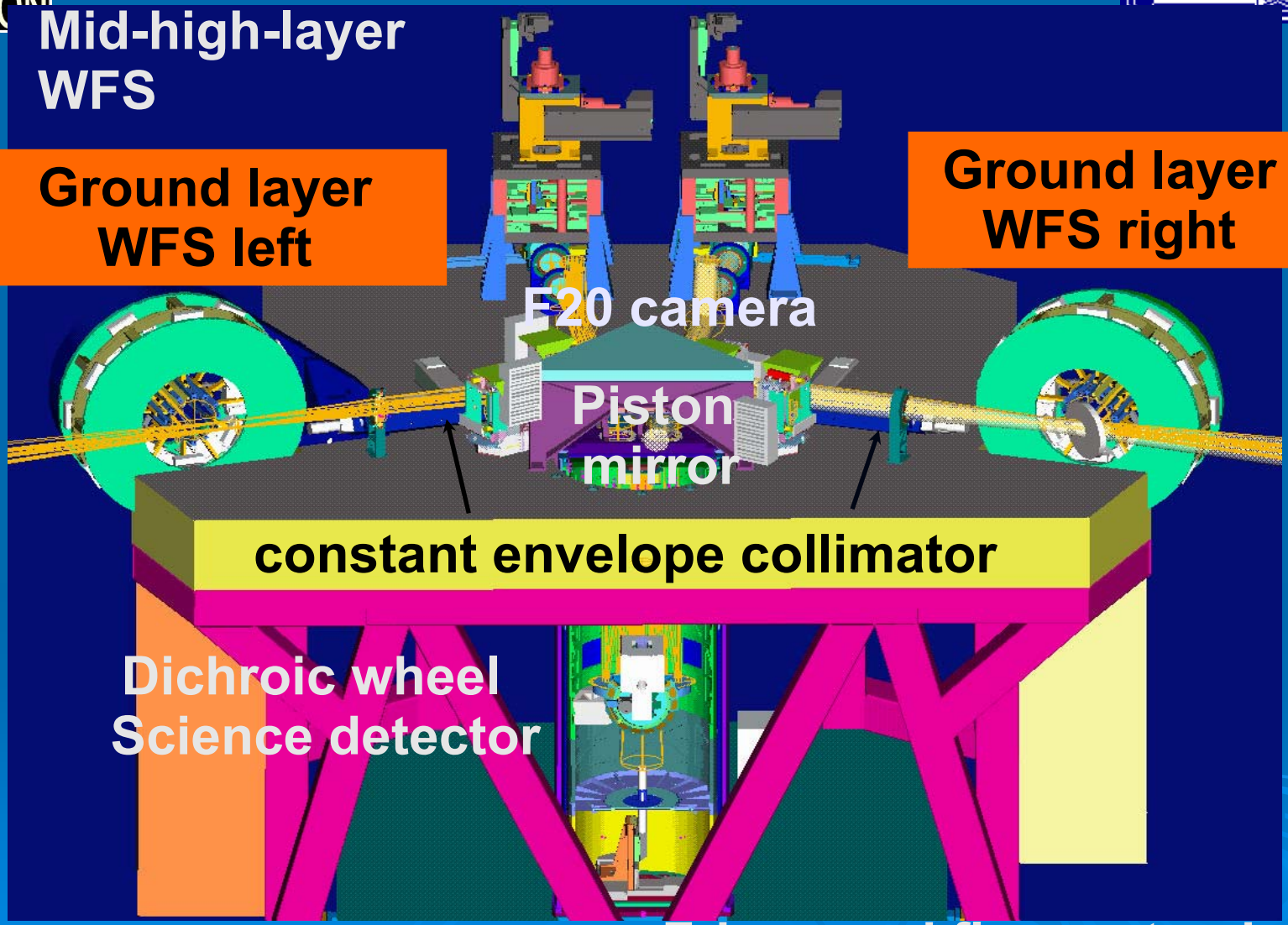

WP 2.4: LBT Multiple FOV WFS

Ground Layer WFS 2'- 6'

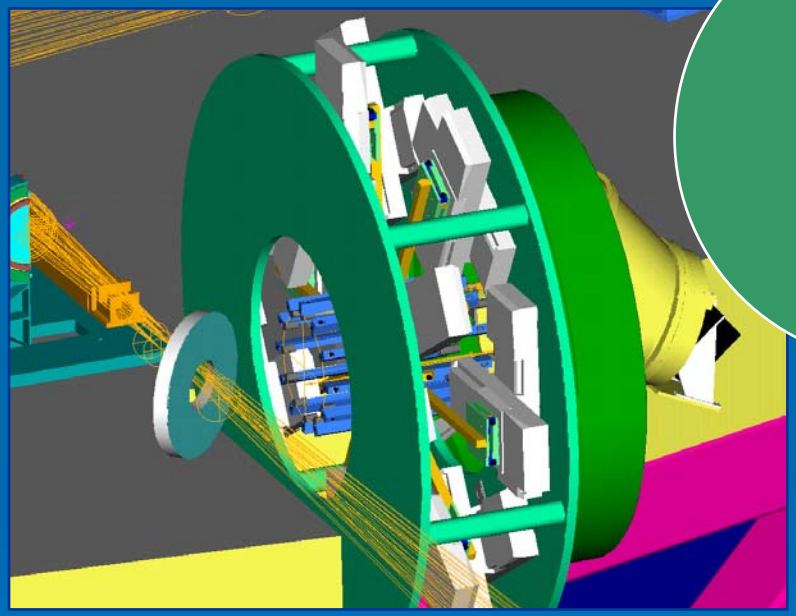

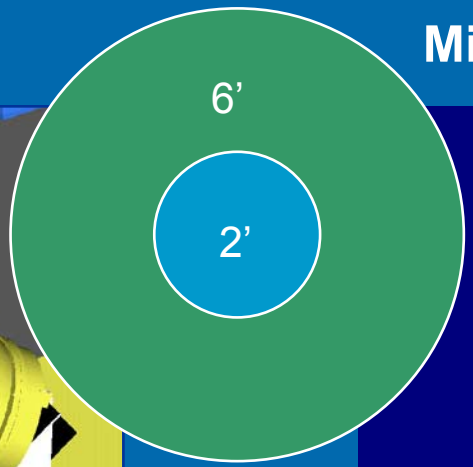

Mid and High Layer WFS 2'

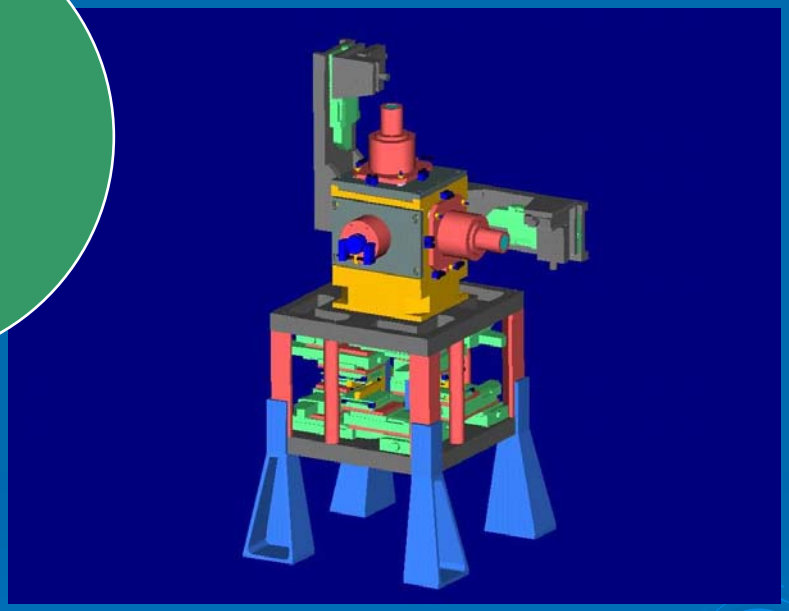

Pyramid sensor
optical co-adding
12 stars in GWS
8 stars in MHWS

WP2.4: 6' FoV Ground Layer WFS

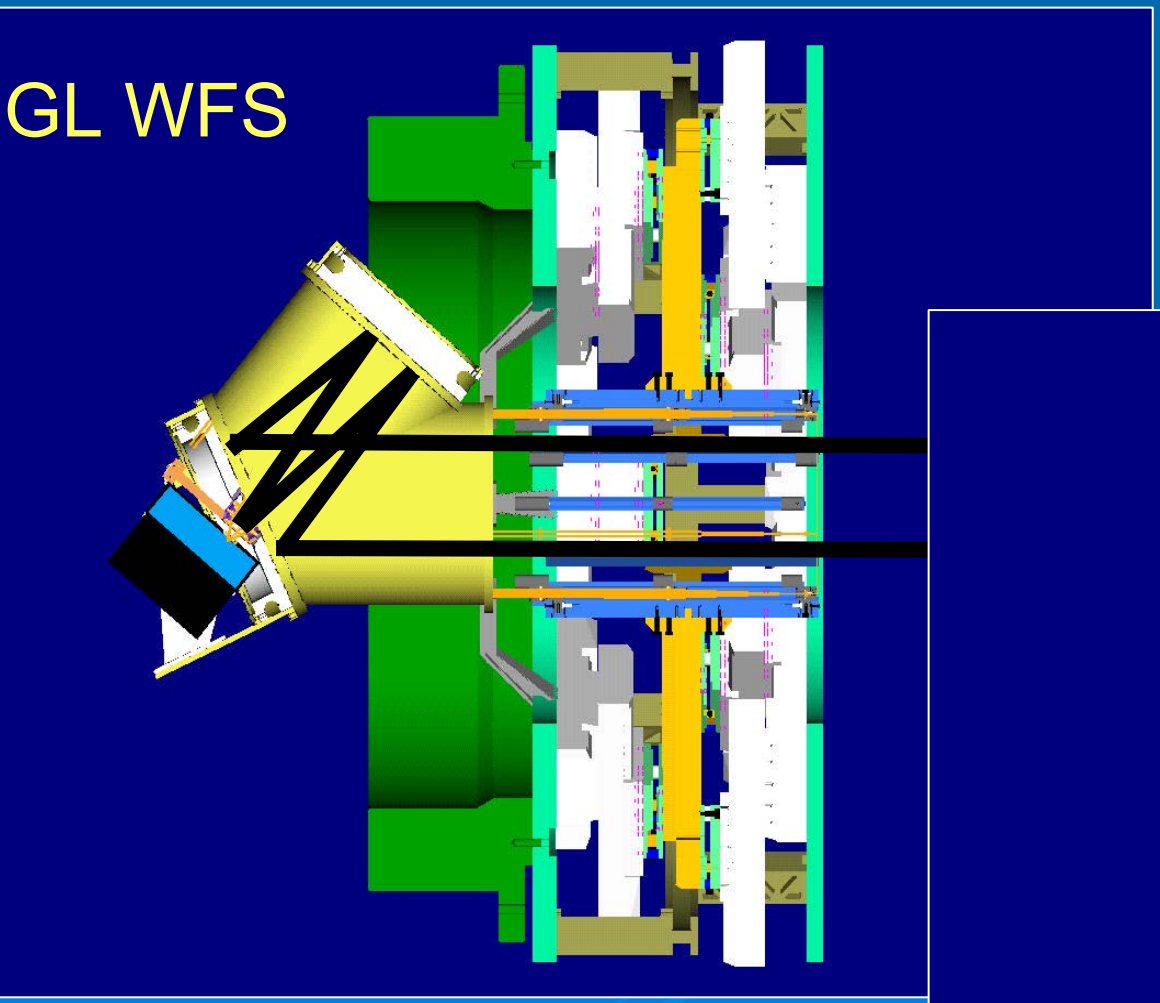

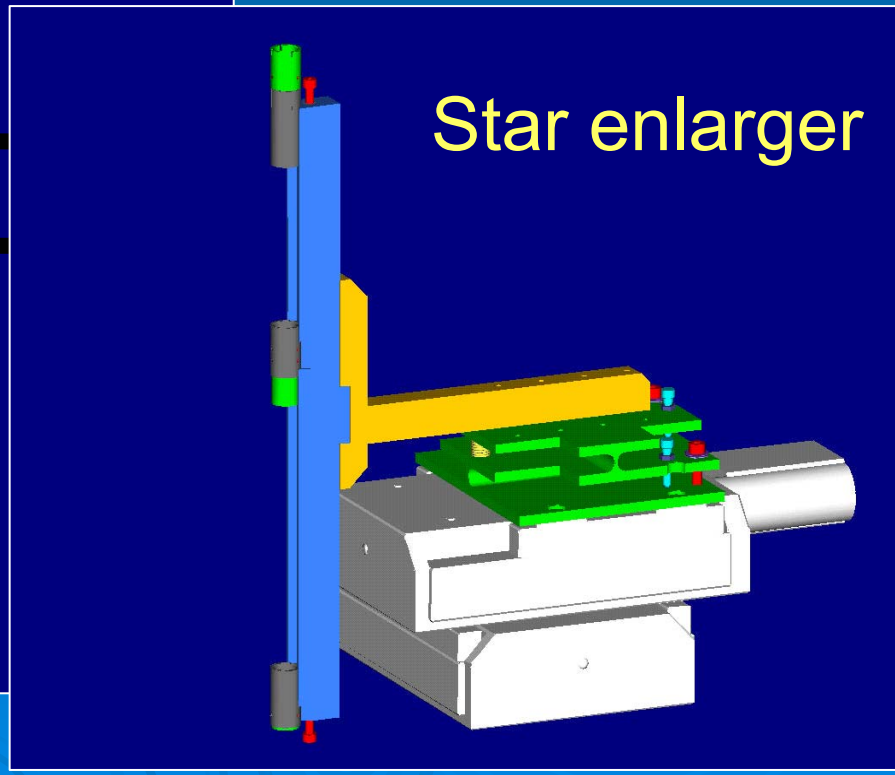

WP 3.1: Real Time Computer Platform Status

Specification of the 2nd generation AO and MCAO RTC Platform	01.01.04	3 M	
Conceptual Design Study & Procurement	05.04.04	10 M	
Conceptual Design Review	**21.01.05**	**Milestone**	☑
Computational module testing	24.01.05	2 M	
Performance and test report	**18.03.05**	**Milestone**	M1 ←
AO Platform Prototype development (HW & SW)	21.03.05	11 M	
AO Platform Prototype testing	04.03.06	6 M	
Test Report	**26.08.06**	**Milestone**	
AO-MCAO RTC Platform Design	18.01.07	5M	
Final Design Report	**19.07.04**	**Milestone**	M2
AO-MCAO RTC Platform Final Design	**22.01.07**	**7M**	
Final Design Report	**10.08.07**	**Milestone**	

WP 3.1 SPARTA Real Time Computer platform

PARTA crate based on hybrid technology: integrates FPGAs and PUs on the same computational unit

- Fast FPGA-CPU bus
- Super fast FPGA-FPGA bus (<µs latency)
- Massive parallelism due to FPGA
- High flexibility due to CPUs
- FPGA implements fundamental building blocks (i.e.: acquisition, MVM / S-MVM)
- CPUs configure, monitor, coordinate FPGAs

MVM: matrix-vector-mult
S-MVM: sparse M

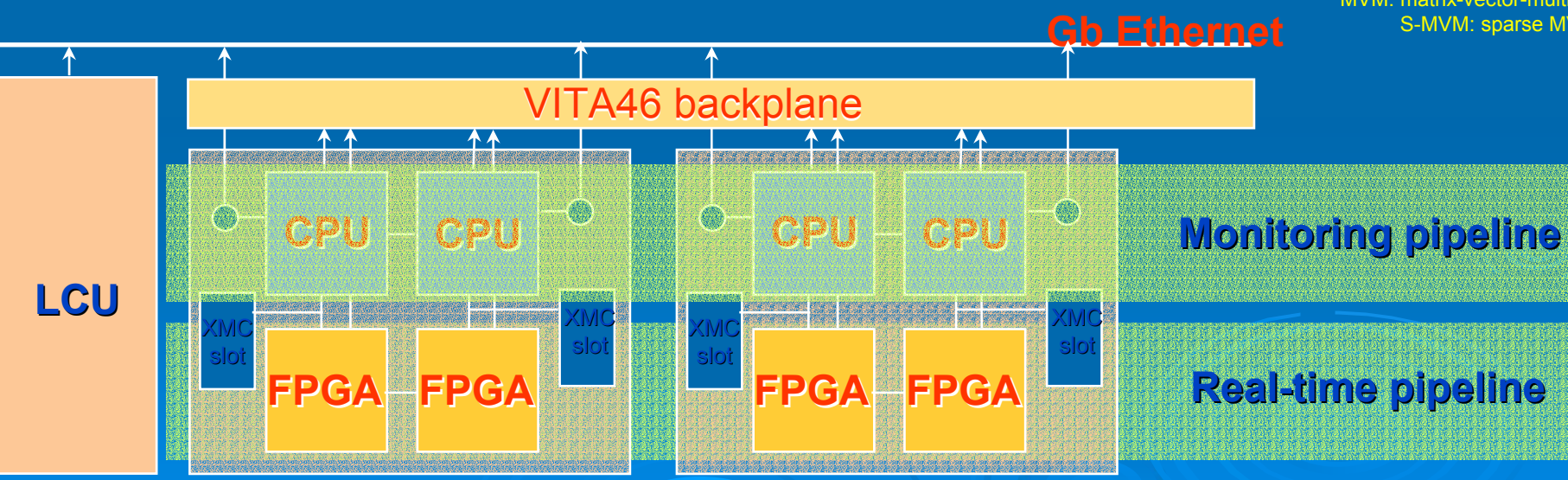

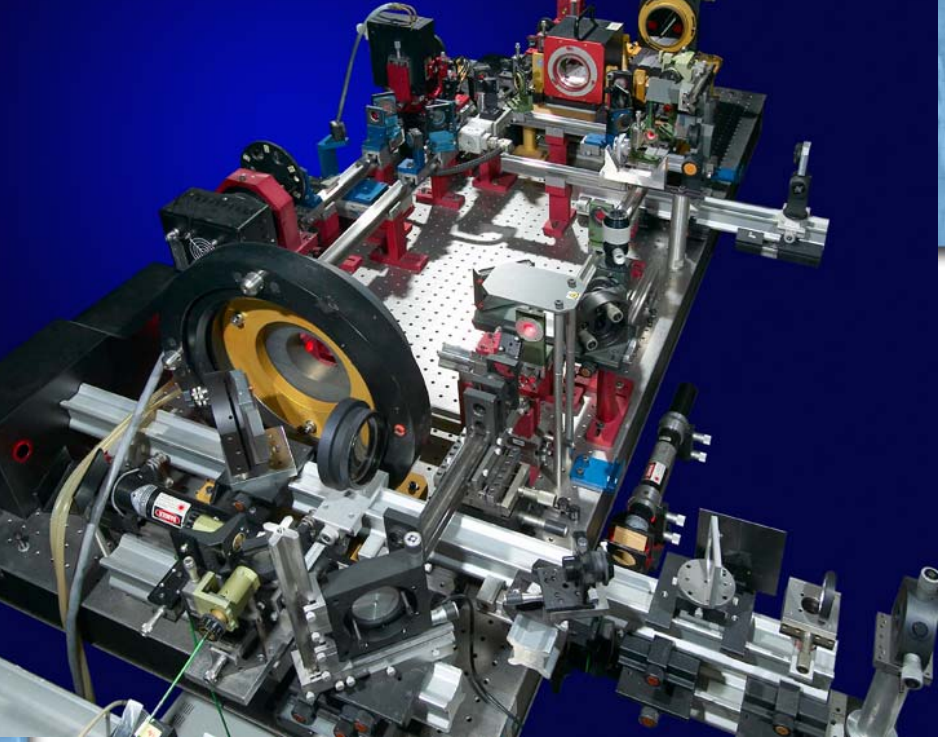

WP 3.2: Optimal Control for MCAO

- Open-loop static Off-Axis AO: validated => FALCON MOM
- First images with Kalman based AO closed-loop !!
- Next Steps :
  - Optimization of the control loop (hardware/software (models))
  - Comparison with the end-to-end simulation
  - Experimental validation of the Kalman filter in closed-loop Off-Axis A
  - Robustness study : analytical/numerical/experimental

WP 3.3: High density Piezo DM

- Context: VLT Planet Finder with 1370 actuators!
- CfT and contract of **900 k€** in place with CILAS (F)
- Design phase to be completed end of 2005
- Scale down prototypes being developed

CILAS

PROPRIETARY INFO

Objectives: VLT

41^2 act. Piezo DM (1370!)
4.5 mm spacing; 10 KHz
8 µm stroke

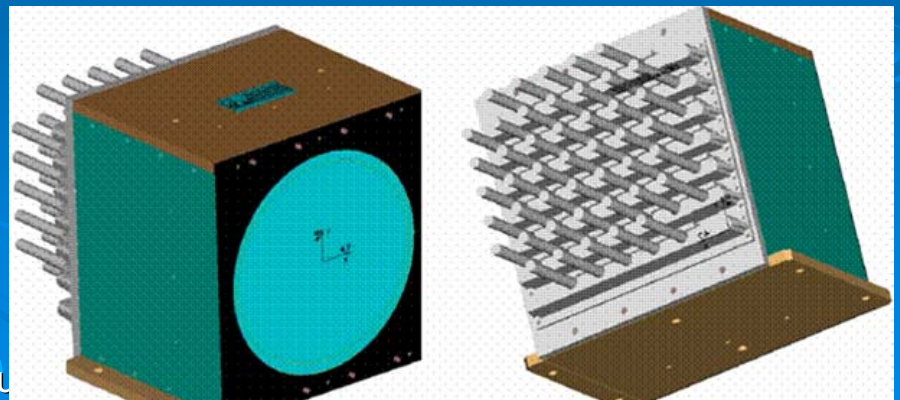

Piezo DM Mock-up

WP 3.4: Drive electronic for the piezo DM

- From Piezo DM design => specs for drive electronics
- Fixed price (**230k€**) Call for Tender to be launched
- 1500 channels as goal specifications

EUROPEAN SOUTHERN OBSERVATORY

Organisation Européenne pour des Recherches Astronomiques dans l'Hémisphère Austral
Europäische Organisation für astronomische Forschung in der südlichen Hemisphäre

VERY LARGE TELESCOPE
TELESCOPE SYSTEMS DIVISION

Statement of Work
for the
Second Generation of
Corrective Optics Drive Electronics

Doc. No.: VLT-SOW-ESO-14690-3713
Issue: 1
Date: 08.09.2005

Author(s)	Enrico Fedrigo Michel Duchateau	
Approval	Markus Kasper	
Release	Norbert Hubin	

WP 3.5: VLT Deformable Secondary

VLT-DSM

- Conceptual design **~186k€**
- Design review conducted in August ‘05
- Diameter: 1.1m
- 1170 actuator with 29 mm pitch
- 1 ms response time

MICROGATE

ADS International

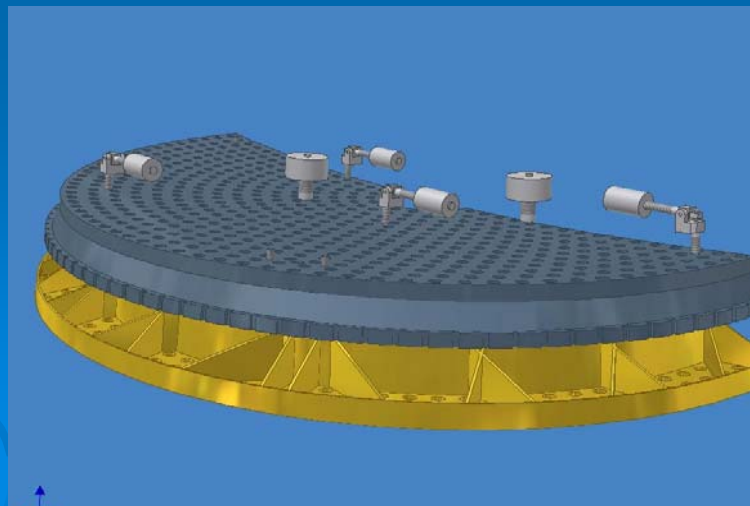

WP 3.5: VLT Deformable Secondary Mirror

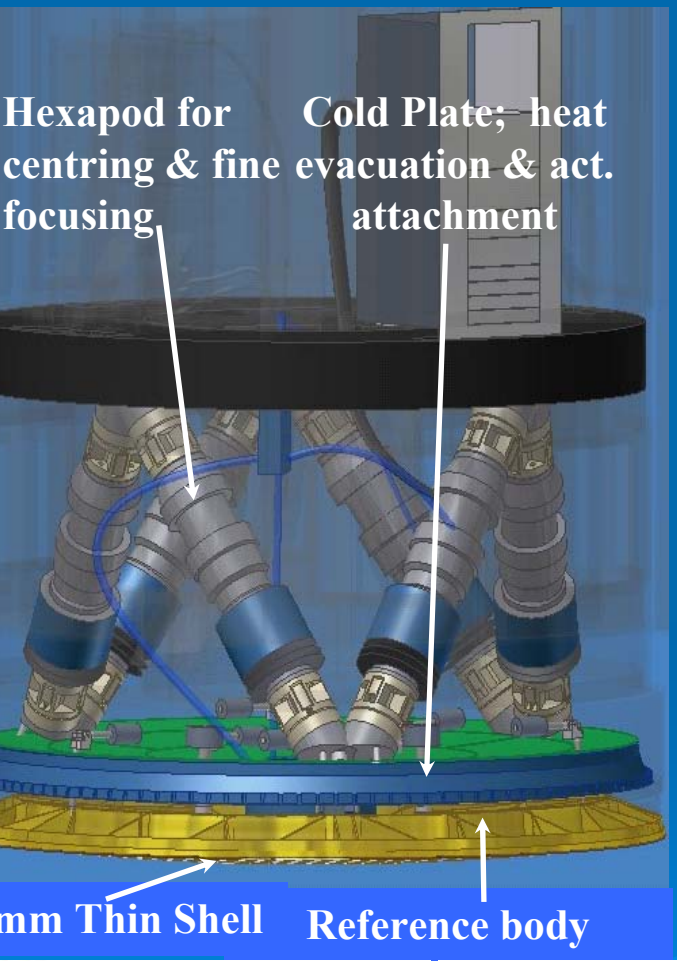

PROPRIETARY INFO

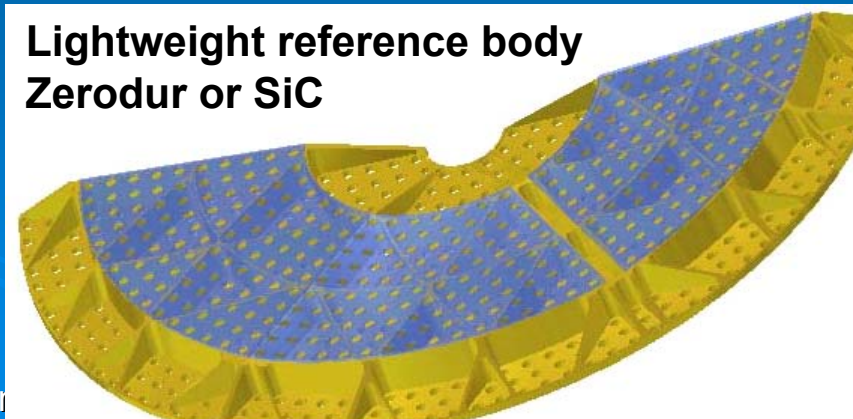

ADS International

MICROGATE

WP 3.5: FEM analysis of DSM

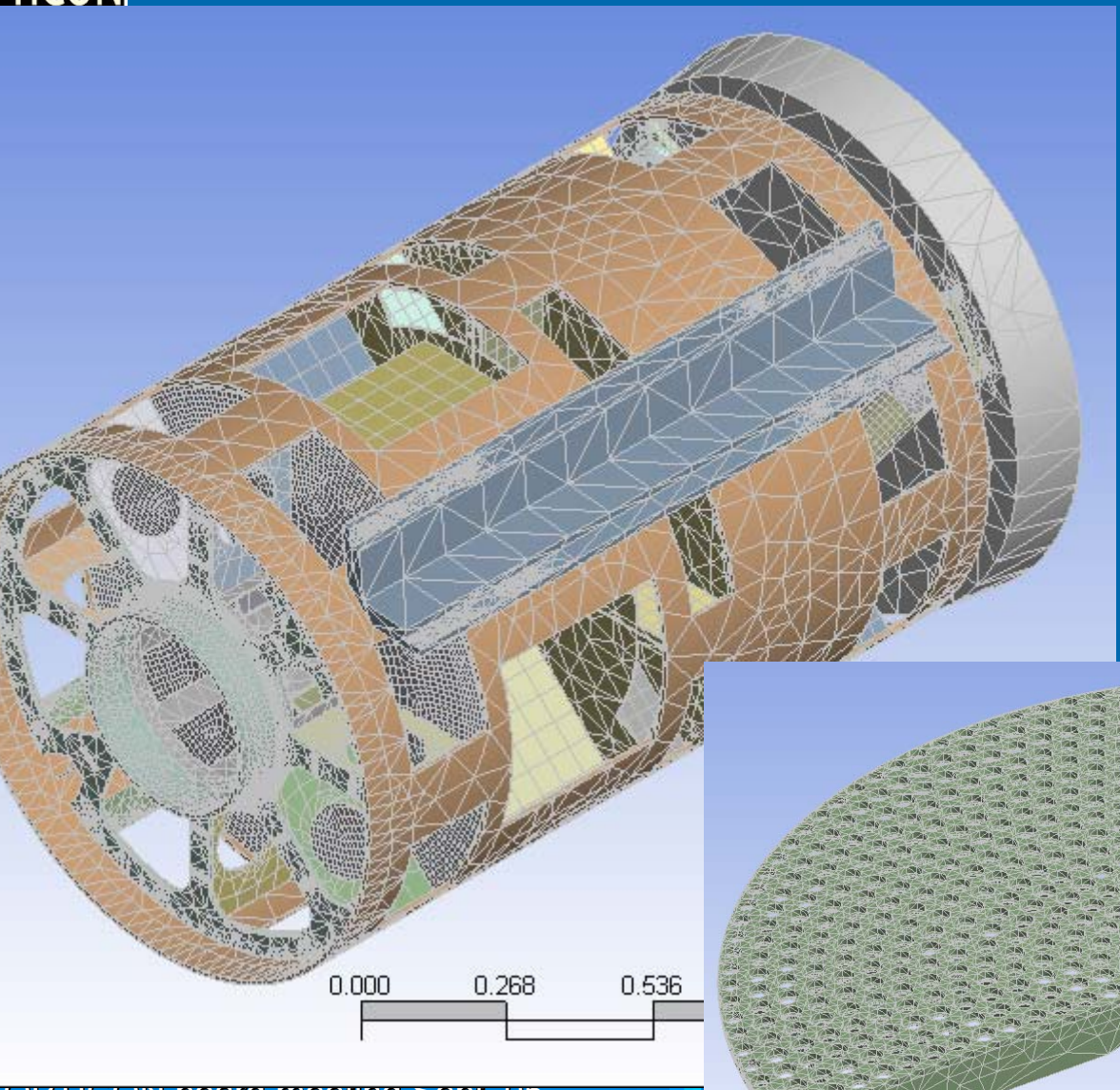

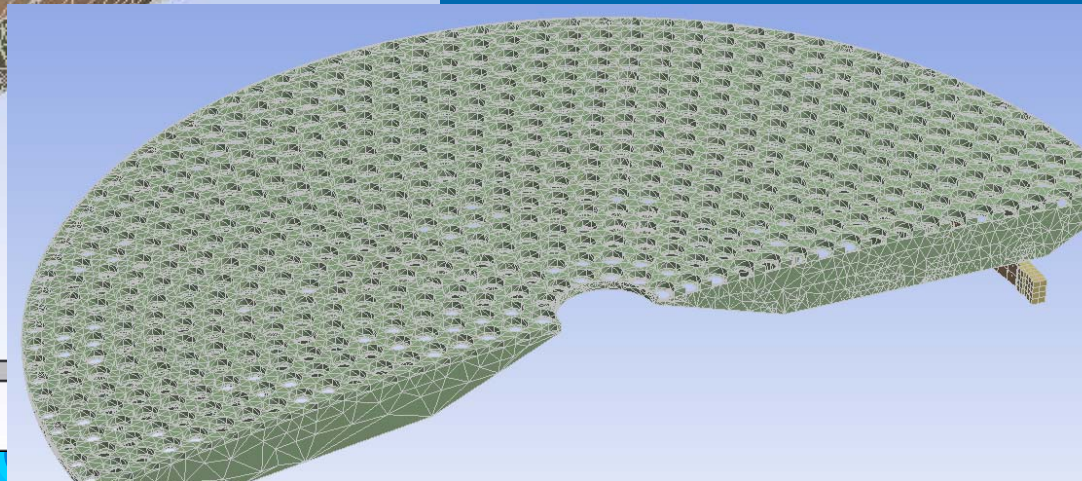

MICROGATE

ADS International

WP 3.5 VLT DSM Actuator Pattern

ing	# of act.s per ring	Total # of act.s
1	14	14
2	20	34
3	26	60
4	32	92
5	38	130
6	44	174
7	50	224
8	56	280
9	62	342
10	68	410
11	74	484
12	80	564
13	86	650
14	92	742
15	98	840
16	104	944
17	110	1054
18	116	1170

CTUATORS SEPARATION

28.5 < Dist. < 29.6

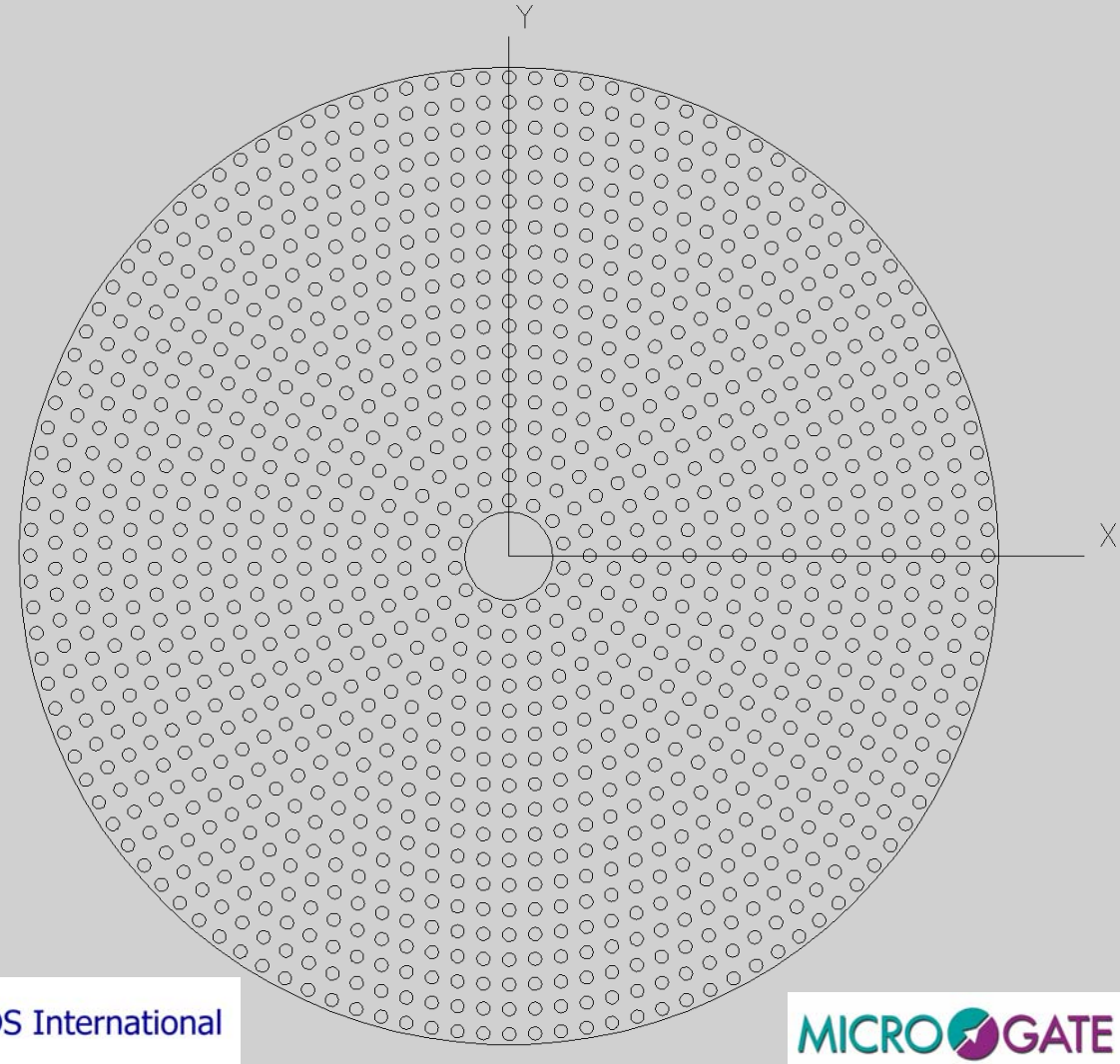

ADS International

MICROGATE

WP 3.5: ASSIST A DSM TEST FACILITY

Objectives:

- VLT DSM system test
- VLT DSM in closed loop w/ turbulence
- Test GLAO w/ Multi LGSs & 3D turbul.

Status:

- Conceptual design

Relevance:

- GALACSI, GRAAL, AO visitor focus

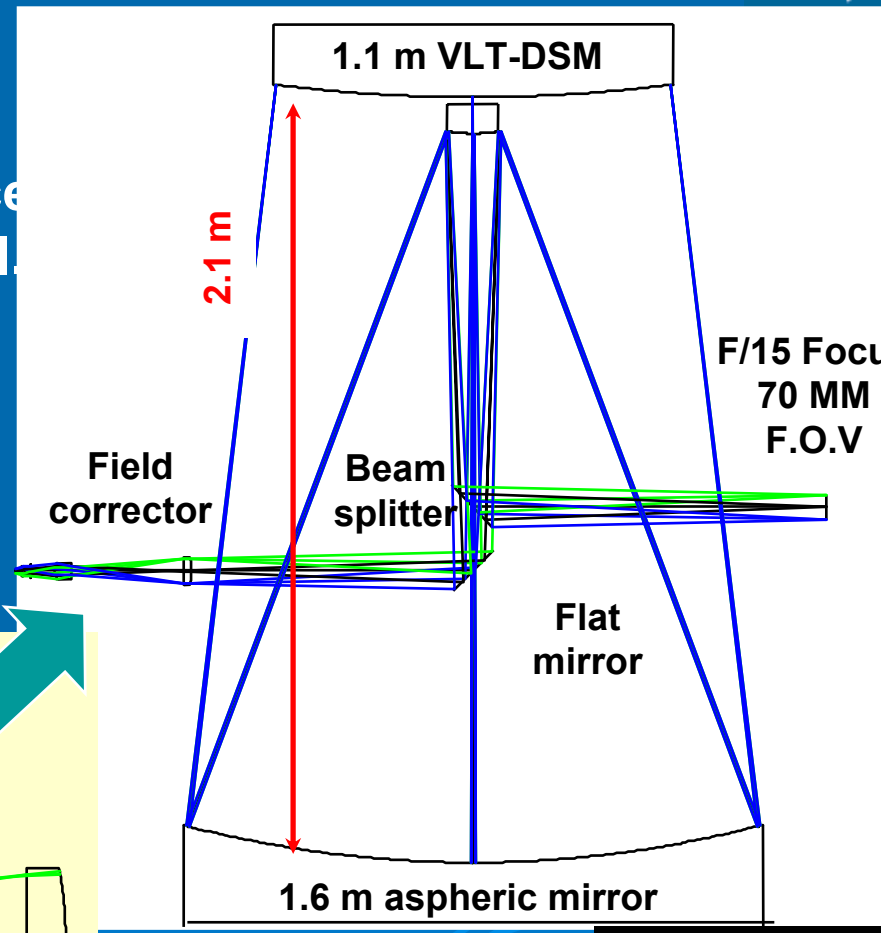

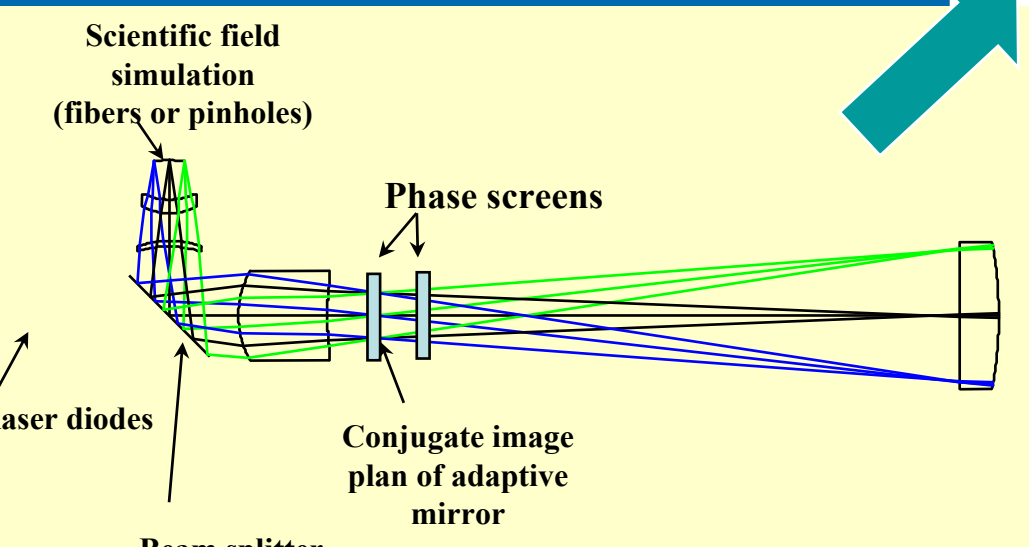

WP 3.5: ASSIST test facility concept

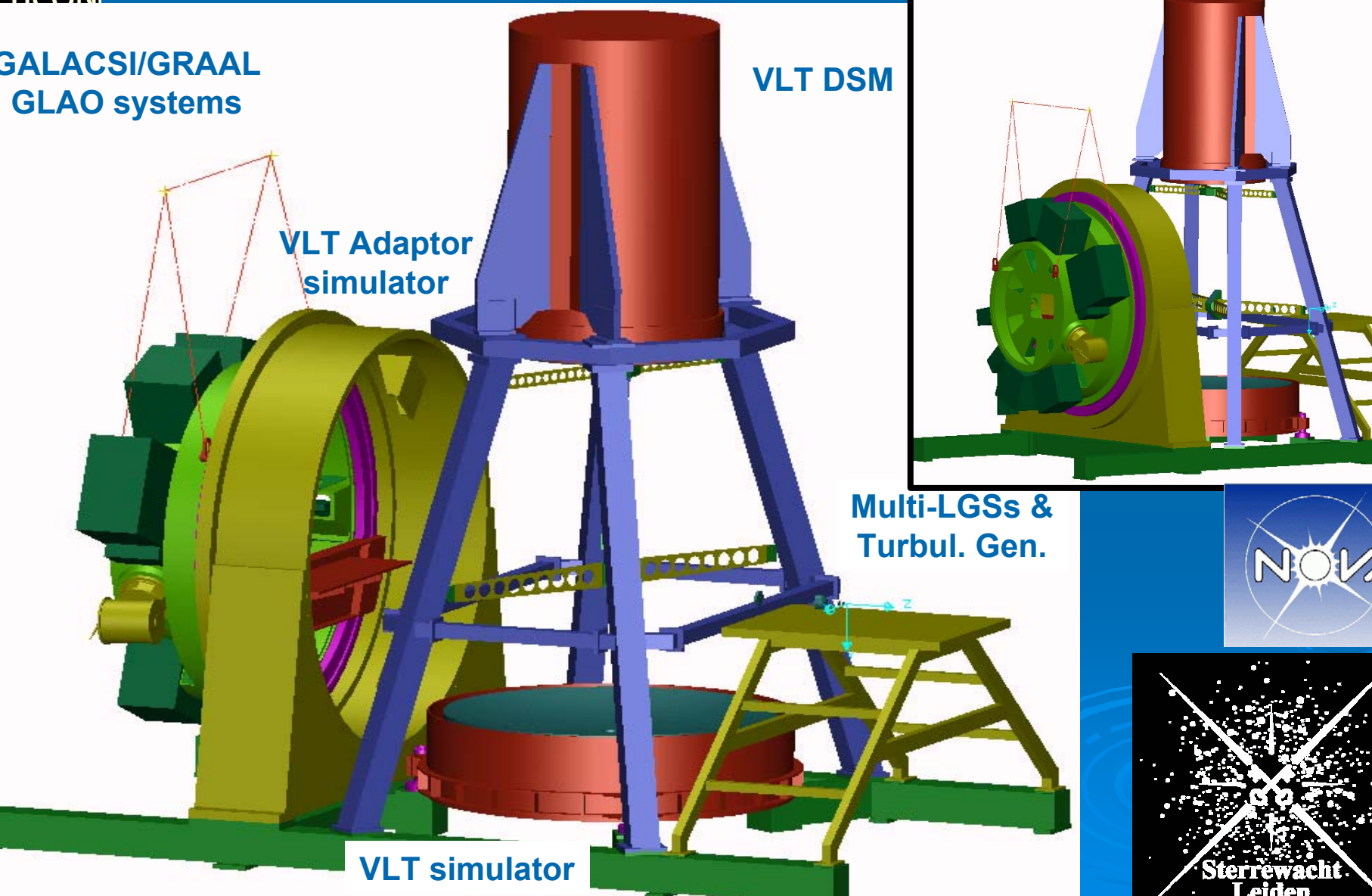

WP 3.6 Zerodur Thin Shell Procurement

- Discussion with industrial partners for potential dev. techniques; Oct. ’04
- Final Technical Specs deduced from DSM; April ’05
- Price inquiry of Shell blank; May ’05
- Launch of CFT fix-price **300 k€;** June ‘05
- Two answers not fully satisfactory:
  - Breakage risk => provide 2 blanks
  - Tough specifications => Minimum and goal specs TBD
  - Cost
- New CfT soon (slight increase of total cost ~ 350k€)

WP 3.6: Spherical polishing / Relaxation

PROPRIETARY INFO

WP 3.7: Micro-deformable mirror R&D

JRA1 GOAL : Develop an electromagnetic prototype

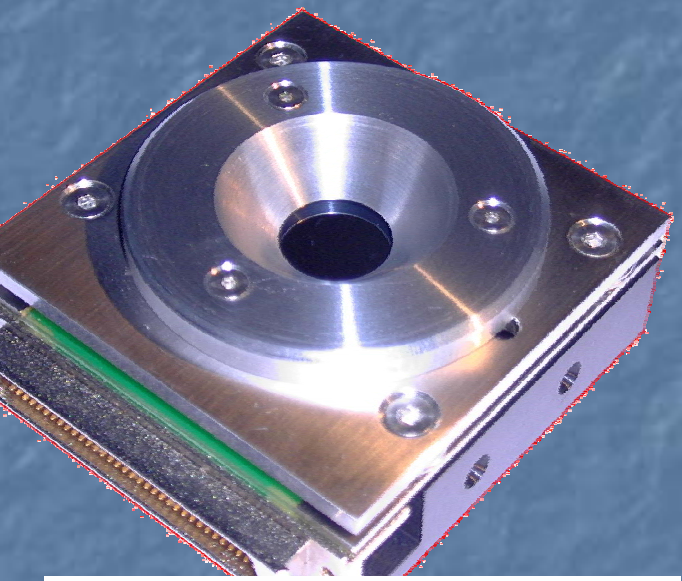

- 52 magnetic actuators
- Silicon membrane (LETI)
- Pitch : 2.5 mm
- Usefull pupil : 15mm
- Stroke > 50μm (mech.)
- Integrated Tip-Tilt
- Best flat < 5nm RMS (mech.)
- Protected Ar coating R>97% [0.45 - 2.5μm]
- Rugosity < 0.5nm RMS
- **Commercially available** (~20k€)

WP 3.7: 2k MEMS DM : CFT status

External expert hired for advice

- ***"YOLE development"*** : database of 380 MEMS companie (113 in Europe)
- 13 companies and 10 research centers pre-selected
- Total of 30 potential contractors

"Request for Information" sent to all contacts

- Most of them only reply "interesting : keep us on your list"

Interesting answers and discussions with:

- LETI
- MEMSCAP
- IMT Neuchatel

WP 3.7: 2k MEMS: Specifications

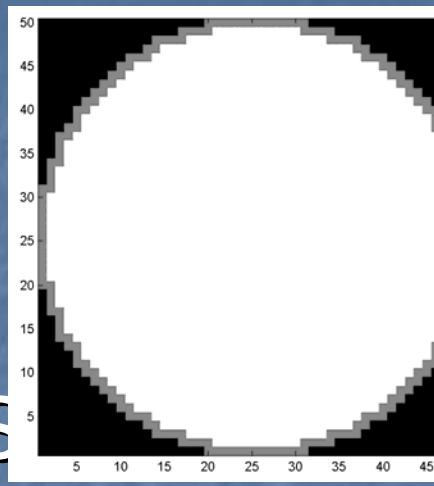

- 1804 actuators (50*50 grid)
- Pitch : 0.75~1mm
- High frequency defects <10nm RMS
- P2V mechanical stroke > 6μm (goal 10μm)
- Inter-actuator stroke > 1μm (goal 2μm)
- Coupling > 20% gaussian
- Linearity error < 10% (goal 1%)
- Settling time < 200 μs

WP 3.8: 2k MEMS DM : Answers

- MEMSCAP
  - Recently aquired *CHRONOS*, owner of the *MUMPS* foundry: manufacturer of *Boston Micro Machine* deformable mirrors …
  - Is it relevant to put money in *MEMSCAP* without any collaboration with BMM ?
- IMT Neuchatel
  - Claim to have 20um@50 V array of actuators : but still "secret" due to pending patents …
- LETI
  - Already demonstrated deformable mirrors
  - Won't sign a contract before the test results of the current project (September 2005)
  - Rough Order of Magnitude Cost : 1M€

2K MEMS DM : LETI technology

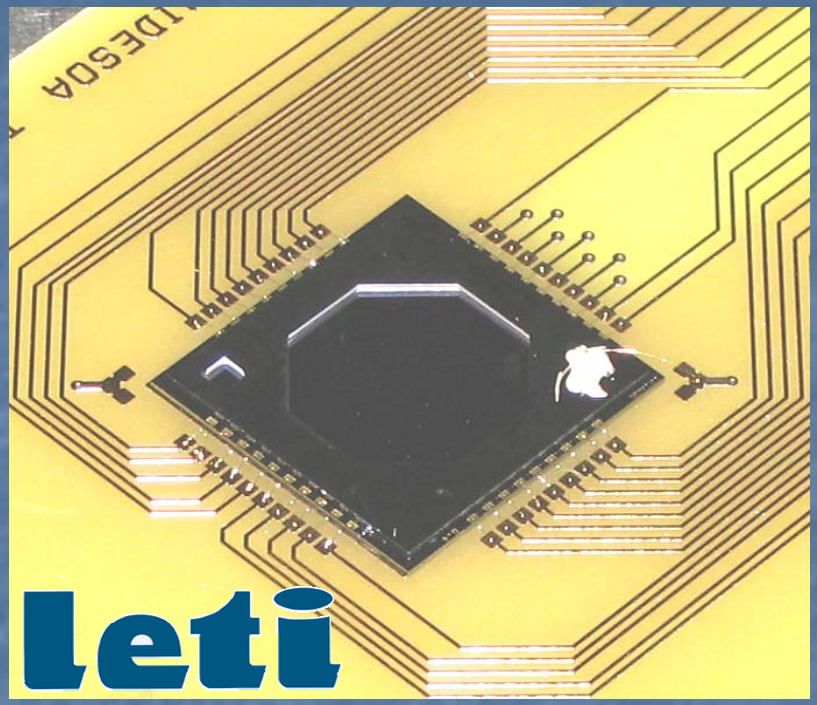

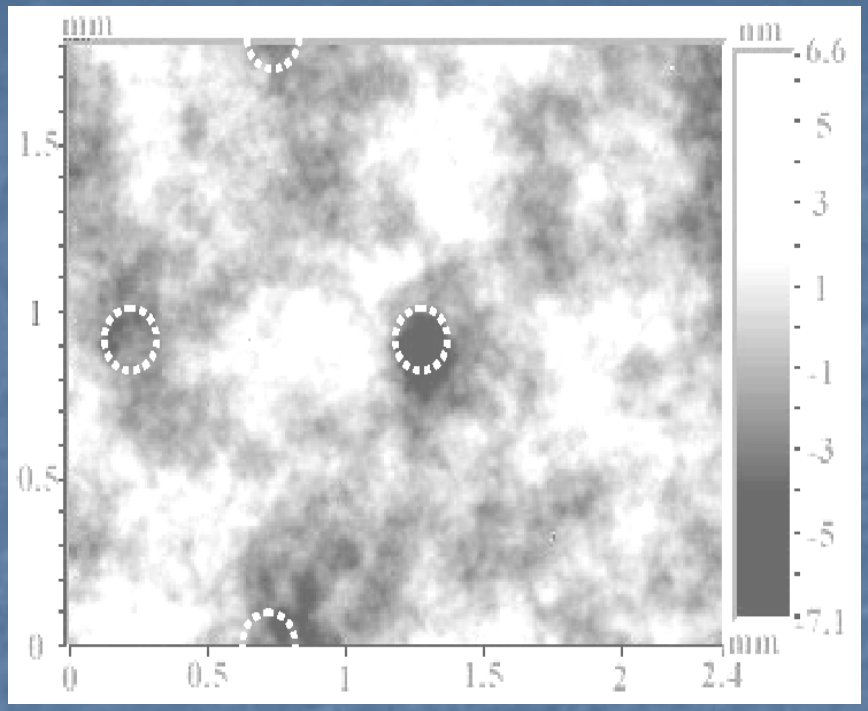

- First prototype : 19 actuators (1mm pitch)
- True continuous membrane
- 1.5nm rms : virtually no print-through

WP 3.7: 2K MEMS DM : LETI technology

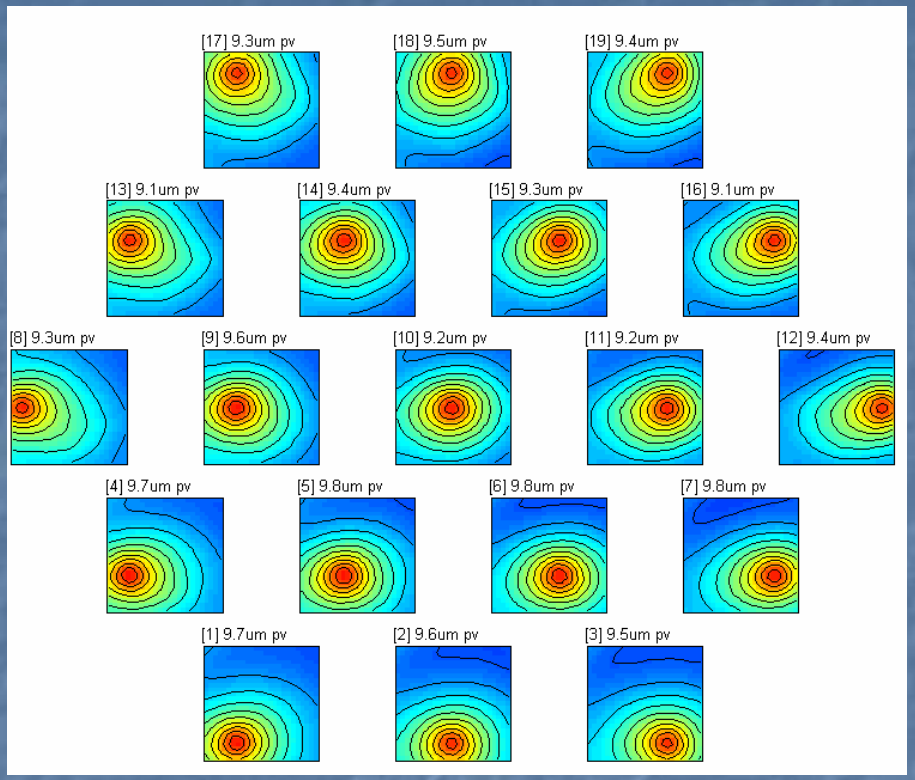

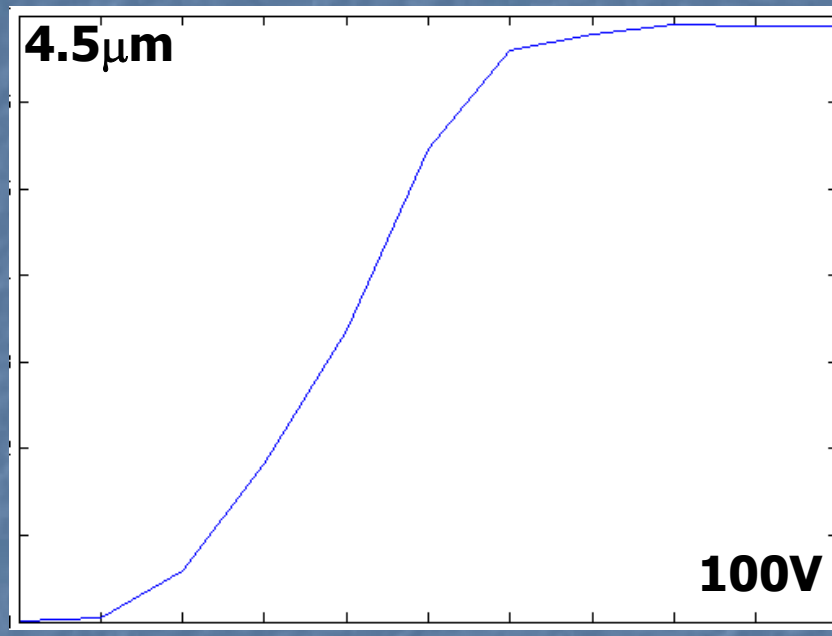

- Clean influence functions
- Stroke: 4.5µm @ 60V (mech.)

- Current limitations:
  - Need a controlled atmosphere (sticking/charging effects)
  - Dynamic performances still to be measured

WP 3.7: 2K MEMS DM : CFT status

- LETI has probably the best technology
  - fully dedicated to adaptive optics
  - Highest optical quality
- Problem at INSU for CFT :
  - 100k€ INSU are missing (expected funds not obtained)
  - 90k€ INSU are "not elligible"
  - **Impossible** to issue a contract with "expected" OPTICON funds
- Actions :
  - Define Minimum and goal specifications and **priorities**
  - Find a solution to issue a CFT asap (fixed price): in process
  - Seek for additional funds

WP 3.7 MEMS drive electronics

- CFT answers :
  - 4 interesting answers from 71k€ to 165k€
  - Winner : Shaktiware (71k€)
- Architecture :
  - Compact PCI bus (64bits/66MHz)
  - One CPU board
  - 8 DAC+HV amplifier boards (128 channels each)
  - Max voltage: 295V
- Status
  - Design finished : FDR 20/06/2005
  - First system delivered to LAOG : October 2005
  - Meeting with ESO July 29th to discuss interfaces with SPARTA

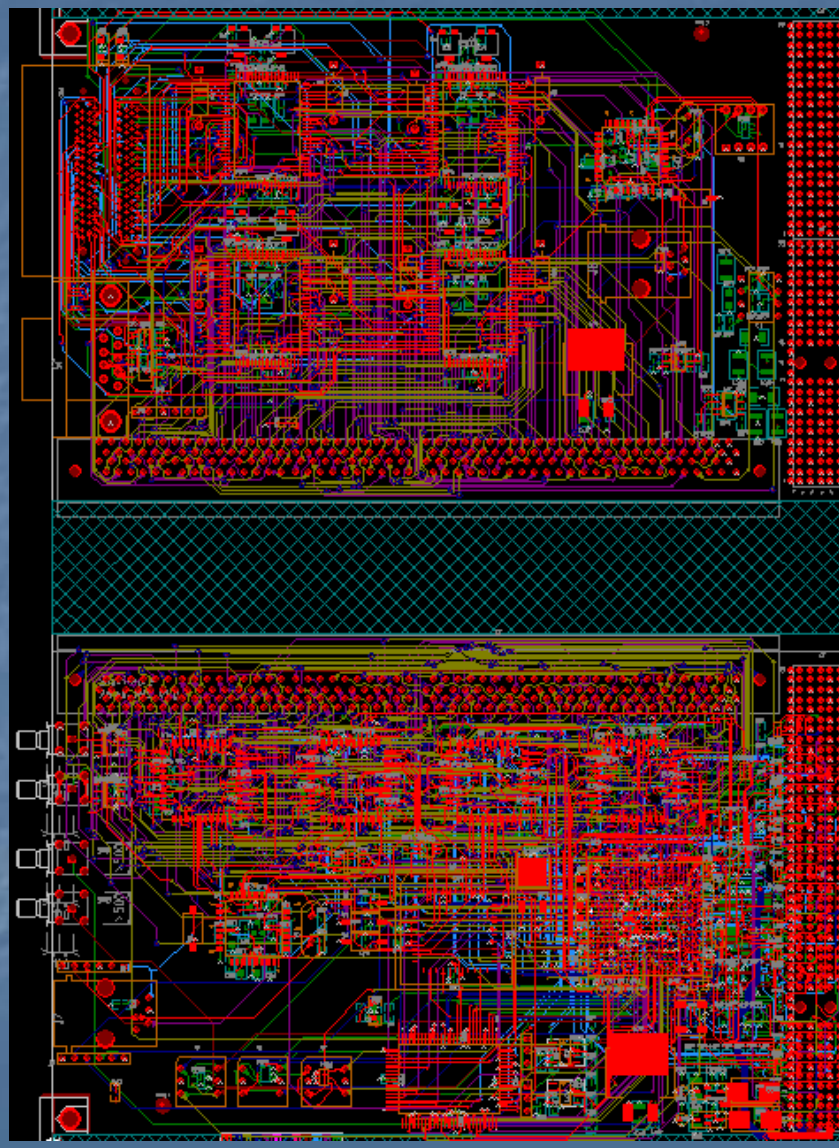

WP 3.8: High Order test bench HOT

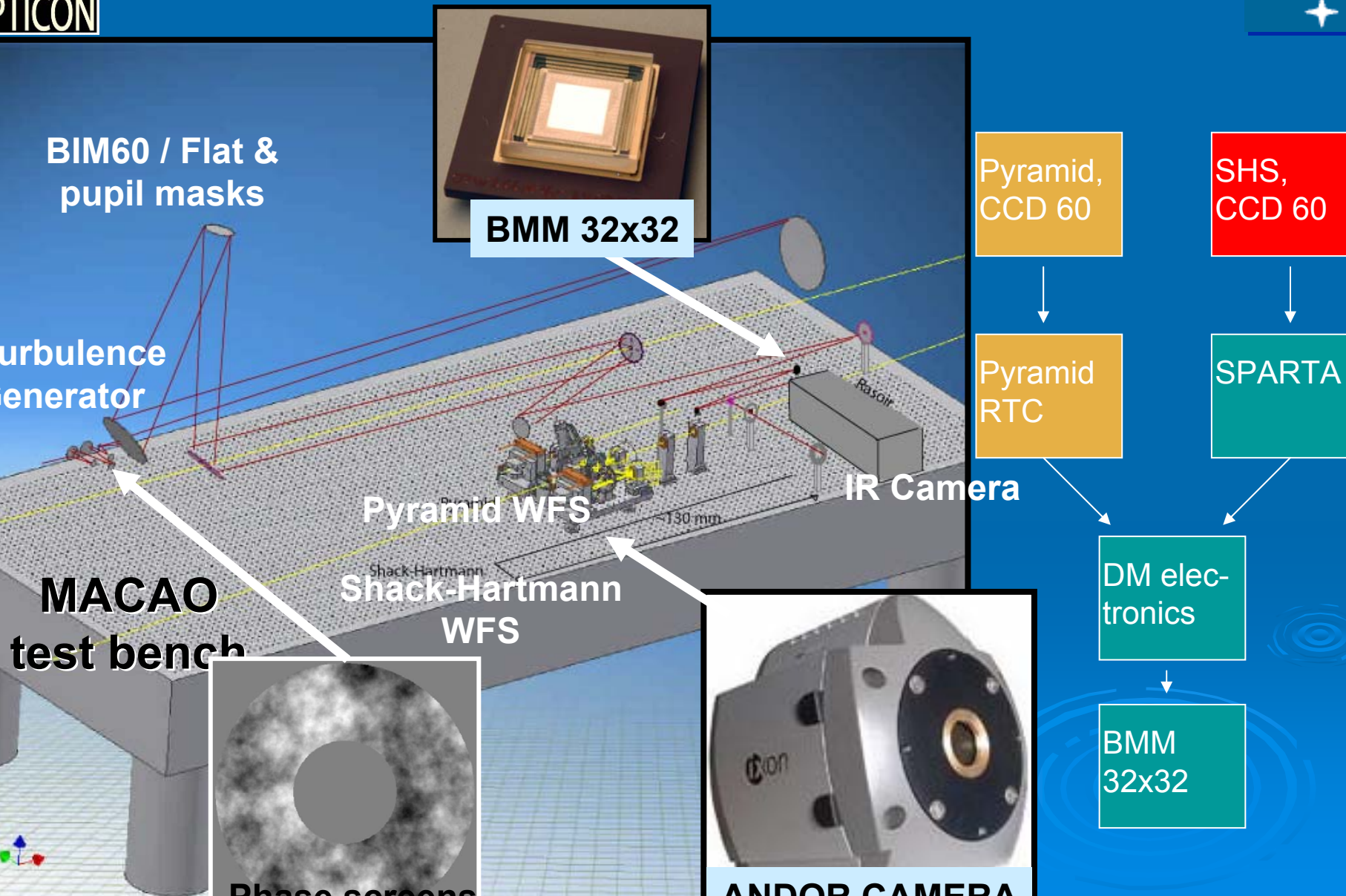

WP 3.8: HOT Components

Boston Micromachines 32x32 DM + 12x12 test device received last month

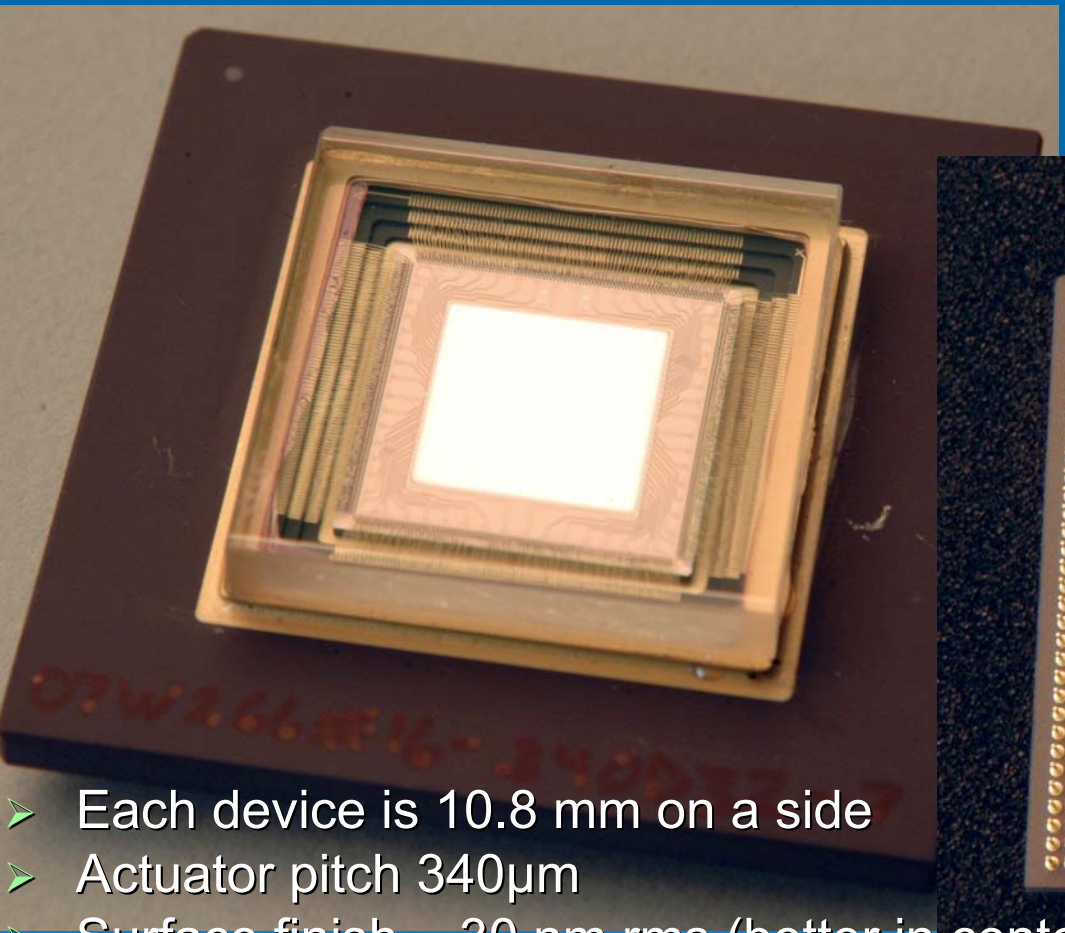

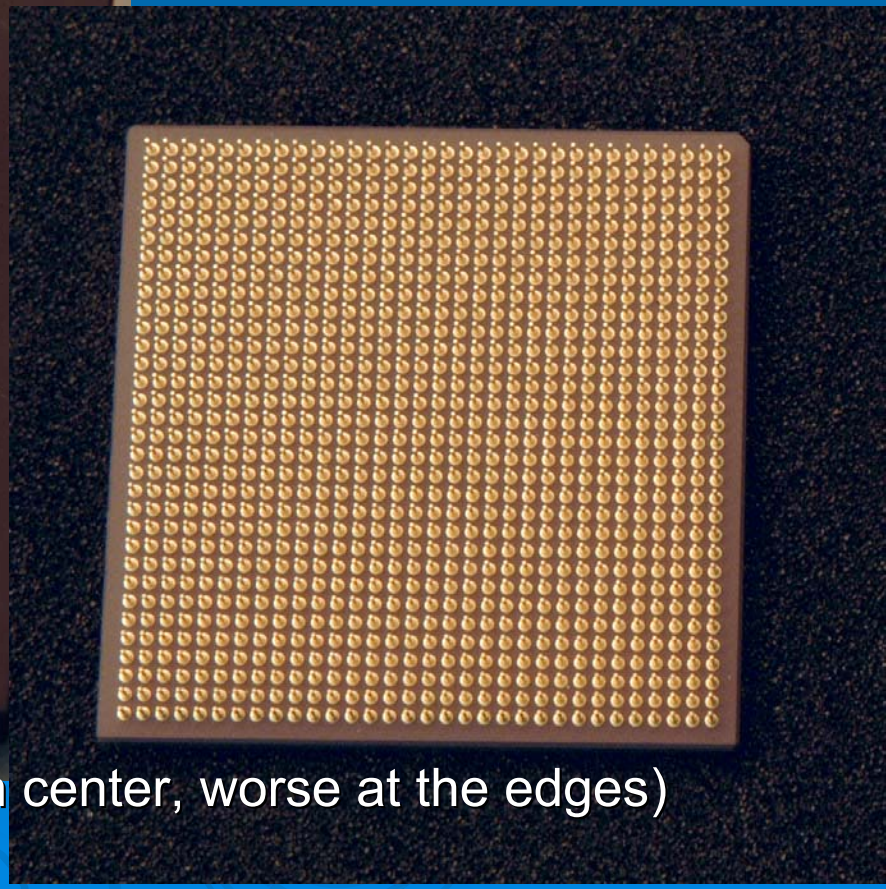

- Each device is 10.8 mm on a side
- Actuator pitch 340µm
- Surface finish ~ 30 nm rms (better in center, worse at the edges)
- 7 kHz bandwidth in atmosphere

Status of subcontracted activities

- Contracts in place:
  - VLT Planet Finder and FALCON (France Germany): 2x 135k € + 115k€
  - Conceptual design VLT DSM: Micrograte (Italy) for ~186k€
  - 1370 Piezo DM development: CILAS for **~900K€**
  - (JRA2: 240x240 L3CCD: E2V (UK) ~1120 k€)
  - Boston µmachine 1024 MDM (US): ~75k$ Delivered
  - Two 128x128 L3CCD cameras: 2x 35k€ ANDOR (UK)
  - MDM control electronic Development: 70k€ SHAKTIWARE (France)
  - Several RTC components: ~50k€
- Cft out or coming soon:
  - Manufacturing Zerodur shell: fixed price 300 K€ in process
  - Piezo DM drive electronic: fixed price 230k€ to be issued soon

JRA 1 FUNDING / EXPENDITURE STATUS

			Expect 2004	Actual 2004	Payment received 2004	Expect 2005	Expect 2006	Expect 2007	Total expect	Jan 0 to Jun 06
TAL UR)	Eligible costs	Direct cost	2.927	1.011		2.747	1.587	552	7.813	4.664
		of which subcontracting	1.544	371		990	525	285	3.344	2.163
		indirect cost	342	161		393	271	53	1.059	574
		Total eligible costs	3.269	1.172		3.141	1.858	605	8.873	5.238
	Requested EC contribution		**1.777**	**640**	**2.162**	**1.706**	**1.003**	**315**	**4.801**	**2.843**

Total eligible cost committed 3.887 k€ (July 05)
Total eligible cost spent 2272 k € (July 05)

Status of deliverables

WP 1: Management

- KO meeting: To+3
- JRA1 General Meeting 1: To+9
- First annual report: To+13
- JRA1 General Meeting 2: To+19

COMPLETED MILESTONES AT THE END OF 2004

MILESTONES ON TRACK AS FAR AS I KNOW

MILESTONES OUT OF SCHEDULE:
CORRECTIVE ACTIONS REQUIRED

JRA1 CONTRACTUAL MILESTONES & DELIVERABLES

WP	Milestones/ Deliverables	Description
2.1	M1	Complete two feasibility and conceptual design studies of a VLT XAO system aiming at planets
2.1	D1	Report on final design study for the selected XAO concept above
2.2	M1	Complete conceptual design study of an LGS GLAO system for the VLT
2.2	M2	Complete NGS MCAO feasibility study based on FALCON concept
2.2	D1	Final design study of the LGS GLAO system for the VLT
2.3	M1	Complete design of a multi-object WFS for the GTC
2.3	M2	Delivery of a Multi-object wavefront sensor prototype for the GTC
2.4	M1	Complete design of a multi-object ground layer wavefront sensor prototype for the LBT
2.4	M2	First light of the multi-object WFS prototype at the LBT
2.4	D1	Test report of the multi-object WFS prototype at the LBT

JRA1 CONTRACTUAL MILESTONES & DELIVERABLES

WP	Milestones/ Deliverables	Description
3.1	M1	Complete conceptual design of the new Real Time Computer platform for the 2nd generation of AO systems
3.1	M2	Complete development of the Real Time Computer platform and performance testing
3.2	M1	Complete theoretical study of the optimal control for MCAO systems
3.2	M2	Implementation of the optimal control methods developed above on a simplified laboratory system and performance evaluation
3.2	M3	Implementation of the optimal control methods on the ESO MCAO demonstrator (MAD) and testing
3.3	D1	Design report of a ~1200 actuator piezo stack deformable mirror
3.3	M1	Testing of a ~1200 actuator piezo stack deformable mirror prototype
3.4	M1	Complete design of fast drive control electronics for the piezo stack deformable mirror developed above
3.4	M2	Complete development of the deformable mirror drive electronic prototype and testing
3.5	M1	VLT adaptive secondary feasibility study
3.5	M2	Complete preliminary design of the VLT adaptive secondary

JRA1 CONTRACTUAL MILESTONES & DELIVERABLES

WP	Milestones/ Deliverables	Description
3.6	M1	Complete feasibility study of a ~1m glass shell for an adaptive secondary
3.6	M2	Manufacturing of a convex glass shell prototype for an adaptive secondary
3.7	M1	specifications and feasibility of a 2k actuator micro deformable mirror prototype; contract signature
3.7	M2	Preliminary design of a 2k actuator micro deformable mirror prototype
3.7	M3	Delivery of a MDM control electronic prototype
3.7	M4	Final design of a 2k actuator micro deformable mirror prototype
3.7	M5	Delivery of a 60 actuator magnetic micro deformable mirror prototype & testing
3.7	M6	Delivery of a 2k actuator micro deformable mirror prototype
3.8	M1	Complete theoretical study of a high order wavefront sensor
3.8	M2	Complete design of a high order wavefront sensor test bench
3.8	D1	High order wavefront sensor test bench report

Proposed Additional activities

- 2k MOEMS development more expensive: +300k€
- Coronagraph for high contrast imaging 198 k€
- Extend capability of SPARTA: 192k€
- ASSIST more complex than originally planned: 96k€

Conclusions

- JRA1 has been very effective
- 2 Planet Finder designs
- 2 GLAO designs
- LBT and GTC WFSs designs
- Several R&D developments launched:
  - SPARTA design
  - 1370 act. Piezo DM
  - MCAO control algorithms
  - VLT Deformable Mirror conceptual design
  - Feasibility study of large glass thin shell
  - 1st electromagnetic micro mirror delivered
  - Design & start of procurement of High contrast bench HOT