Development of
Active Freeform Mirrors (AFM)

Lars Venema – dep. E. Hugot & H. Schnetler

Plans 2013-2016

OPTICON Board

Lake Como, Oct 16th 2012

Background

Progression from Smart Focal Planes → Smart Instruments → Active components

Important Results in past:

- New positioner concepts with demonstrators
- Active optical elements (accurate low order deformable systems and beam steering devices)

Parallel developments:

- Work not only funded via European funds – also national funds
- Space programme (roadmap future missions, but also future instruments)
- Benefit Eu-programme – inter European collaboration – exceeding national programmes

Consortium:

- Astronomy Technology Centre, UK
- Laboratoire Astrophysique de Marseille, F
- NOVA – ASTRON, NL – Konkoly Observatory (?)
- Fund limitations led to loss of one partner: CSEM in CH

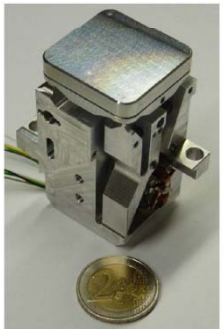

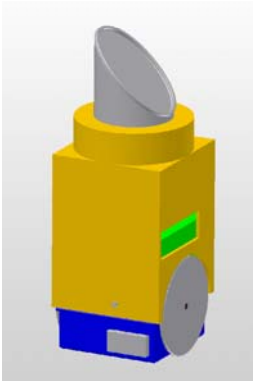

Motivation

Complexity Instruments:

- Increase Optical Path length
- Wide spectral bands – increasing necessity for reflective optics
- Increase in Image quality
- Increase on contrast requirements

Why not Active Instruments:

- Added complexity – risk for failure
- Added costs (active systems are expensive)
- Lack of stability – especially for calibrations

Why Active Instruments:

- Facilities can not control all parameters any more (tip/tilt, chopping, derotation, plate scale…)
- Requirements
- Stability of calibration of telescope is increasingly dynamic anyhow

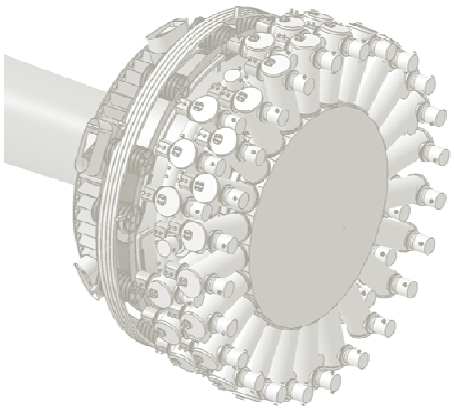

Ideal Instrument:

Compact, high throughput optics (LAM)

Ideal Instrument → Extreme aspherics

Scientific objectives

- Observations of the high redshift universe
  Need to increase the flux and throughput
  → gain in limiting magnitude

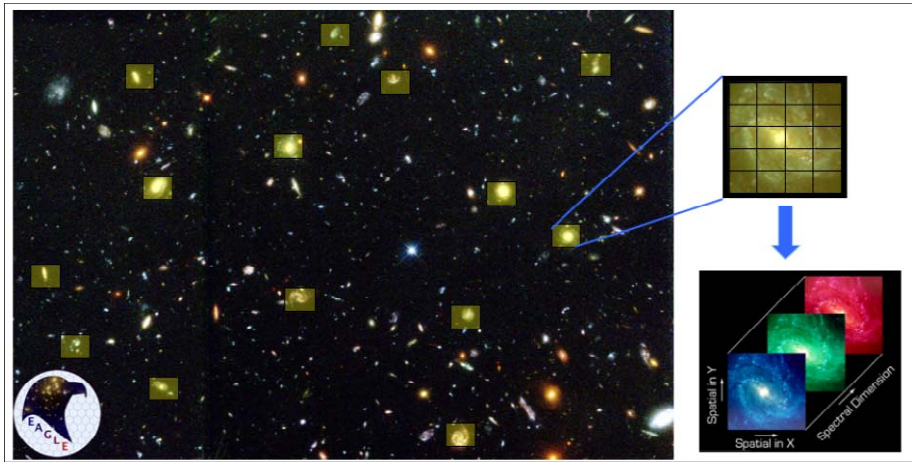

Multiplex 3D spectro-imager

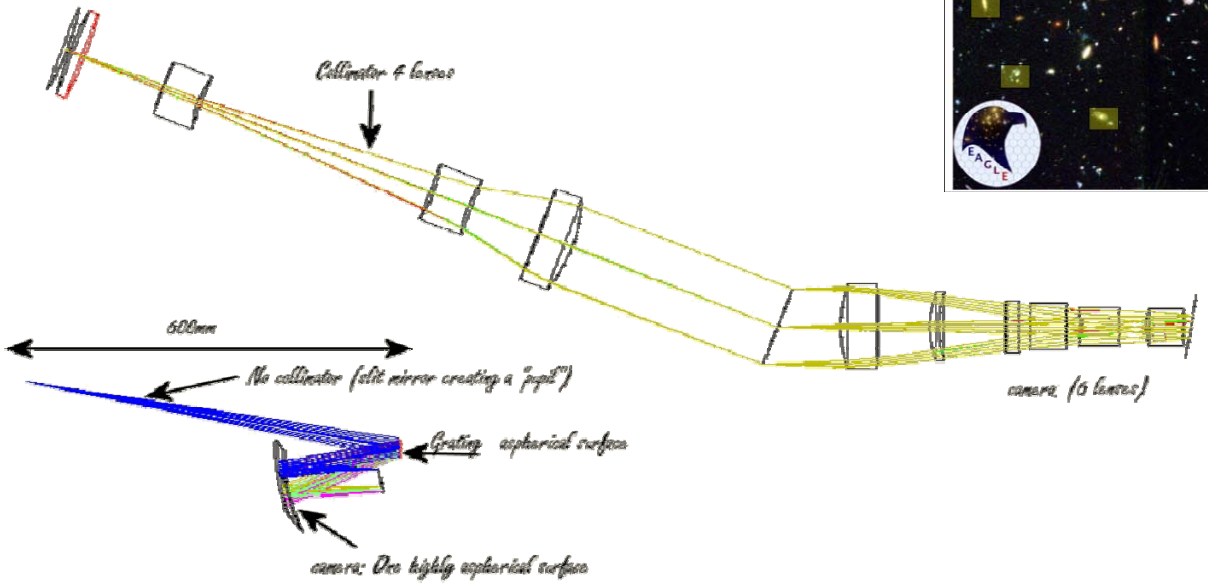

Comparison of 10 lenses concept and 2 mirrors design

- **Minimise the number of optical surfaces in the instrument**

Needs 2 highly aspheric mirrors

Extreme Aspherics

Active Optics

Goal:

- Generate highly aspherics by plasticization of polished substrates,
- Develop new optical concepts including this kind of aspherics and demonstrate the gain

Ongoing research work:

- Quantification of residuals after plasticization
- Minimization of local defects
- Deep study of materials (polissability, thermal behavior,…)

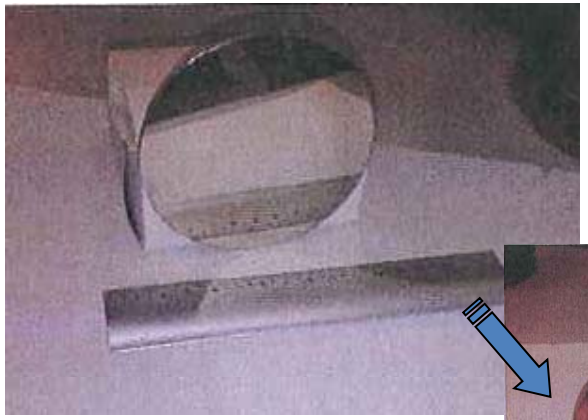

First prototypes :
Left: flat polished substrate,
Right: Plasticization into a parabola.

Six months study in Engineering school

This kind of prototype allows studying the nature of residuals on the polished substrate, quantify them and find adapted manufacturing solutions.

Benefits Extreme Aspherics

a. ***Reduction of the loss of the flux transmitted.***
b. ***The possibility of wider fields of view.***
c. ***Larger spectral bandwidths.***
d. ***Easier access to UV band (less optics, only reflective).***
e. ***Reduced mechanical integration complexity.***
f. ***A reduction of the overall instrument mass and volume envelope.***
g. ***Increased reliability and operational availability.***
h. ***Reduction of optical component cost.***

But:

a. ***Production process in development.***
b. ***Testing more difficult.***
c. ***Alignment much more critical.***

Smart Alignment and control

Intelligent optical alignment

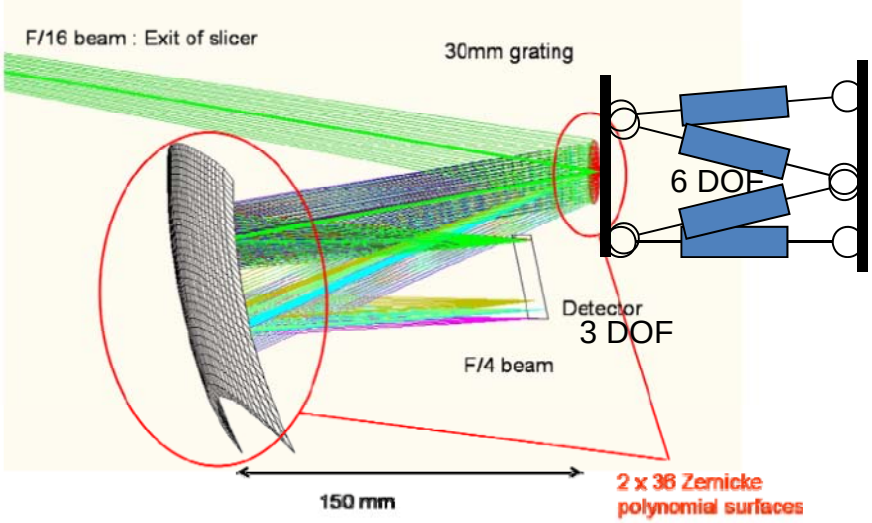

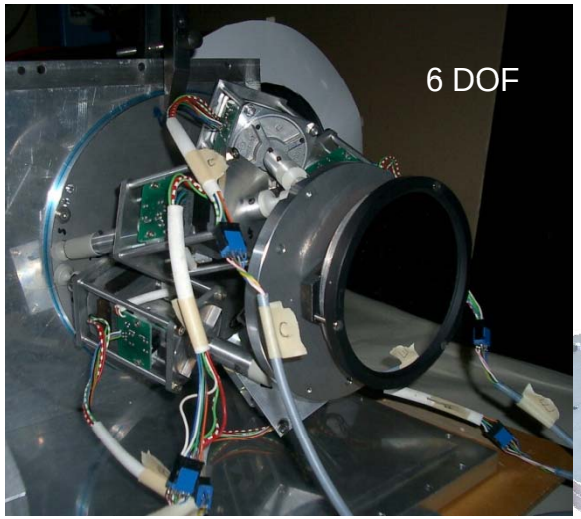

Extreme optics requires smart alignment.

Intelligent optical alignment is required for (combinations of)

- Short F-ratio optics,
- Strong aspheric optics,
- Broad waveband systems,
- Active optical surfaces
- Gravity invariant systems
- Extreme WFE optics

Different levels and combinations of correction

- Alignment
- On the fly correction
- Closed loop, open loop
- Metrology or on-sky control/feedback

Beam Steering Optics

Test Results: Linearity & Cross Talk

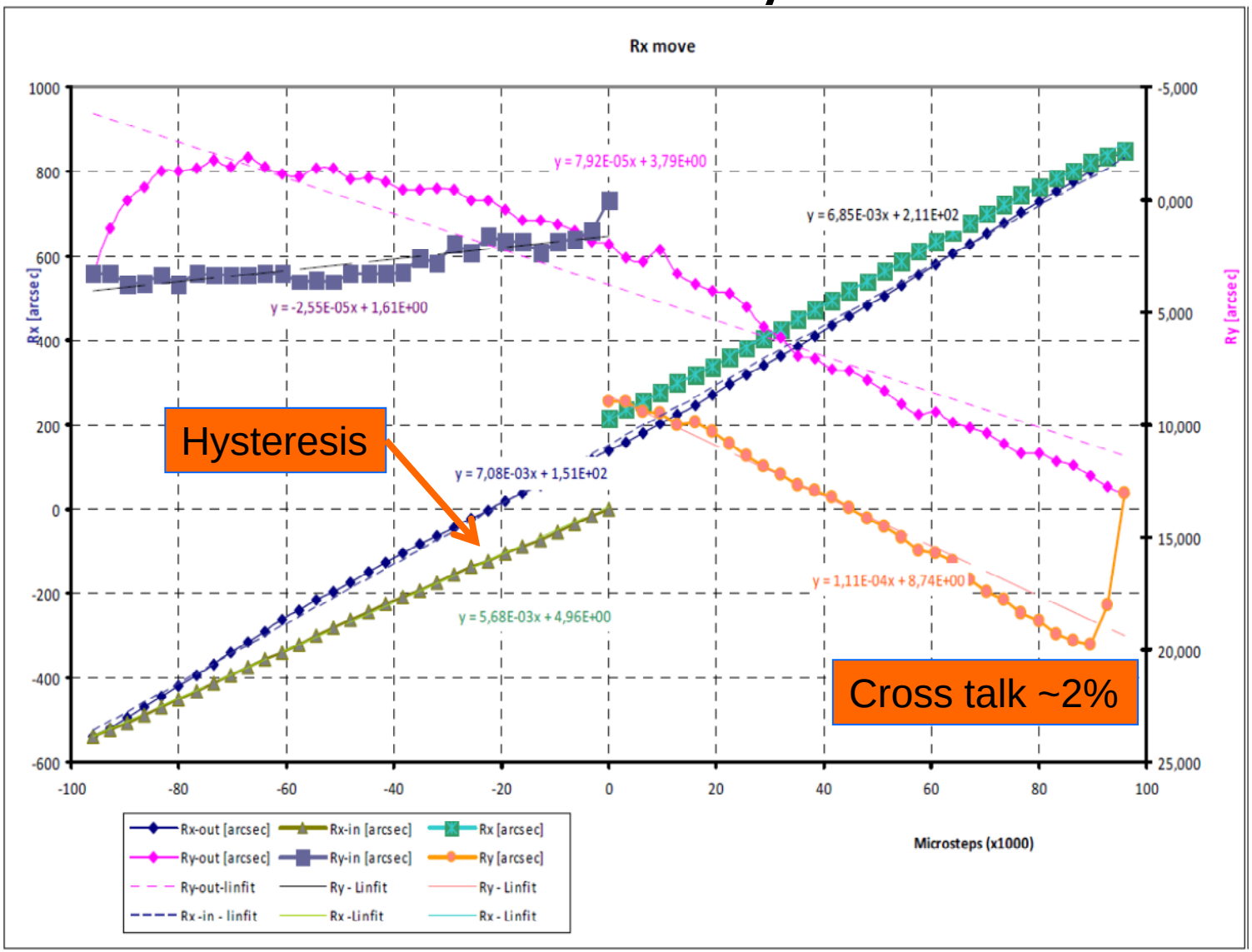

5.1: System Studies

Lead of project LAM (Emmanuel Hugot):

- Specification and definition of the AFM prototype

Tasks:

- Compare with progress in competing technologies
- Select Optical system (Eagle) and make an AFM based design (input phase 1: ZEMAX tool) could consider special capabilities VPH's as well (to be discussed with LAM)
- Perform careful analysis – performance estimates – sensitivities and tolerances

- In parallel continuation with activities on hydroformed surfaces and their characterization (delayed input from phase 1)

Internal deliveries:

- An optical design (of EAGLE) based on active freeform mirrors
- Active Freeform Optical Critical Component Development Specification (external)
- Trade-off study between conventional and AFMs based instrument(s)

	ASTRON	LAM	UK-ATC	NOVA	Participant
	1,0	9,0	2,0	1,0	Person-months
Y1	1,0	6,0	1,0	0,0	Y1
Y2	0,0	3,0	1,0	0,0	Y2
Y3	0,0	0,0	0,0	0,0	Y3
Y4	0,0	0,0	0,0	1,0	Y4

5.2: Component Building Blocks

Lead of project STFC (Hermine Schnetler):

- Adapting phase 1 results to the specific needs of the AFM prototype
- Extending module design and interfaces

Tasks:

- Definition of active array to the right scale
- Selection of actuators for the array
- Detailing integration of face sheet and active array
- Prepare parts and perform pre-integration and analysis of sub-components

Internal deliveries:

- Hardware test prototypes
- Actuator and Metrology Design Report (external)

	ASTRON	LAM	UK-ATC	NOVA	Participant
	5,0	7,0	5,0	1,5	Person-months
Y1	2,0	2,0	1,0	0,5	Y1
Y2	2,0	2,0	2,0	0,5	Y2
Y3	1,0	3,0	2,0	0,5	Y3
Y4	0,0	0,0	0,0	0,0	Y4

5.3: System Integration and Performance Characterization

Lead of project NOVA-ASTRON (Lars Venema):

- Procuring, manufacture, integration and characterization of AFM prototype

Tasks:

- MAIT for AFM
- Integration including AFM control
- Characterization of AFM performance

Internal deliveries:

- AFM demonstrator (external) → Q: what does this imply?
- AFM Performance report (external)

	ASTRON	LAM	UK-ATC	NOVA	Participant
	8,0	9,0	4,0	2,5	Person-months
Y1	0,0	0,0	0,0	0,0	Y1
Y2	0,0	0,0	0,0	0,0	Y2
Y3	4,0	3,0	2,0	1,0	Y3
Y4	4,0	6,0	2,0	1,5	Y4

Cost Summary

Institute	Labour	Material	Total
ASTRON	134,3	45,0	179,3
LAM	223	20,5	243,6
UK ATC	107	80,0	187,1
NOVA	48	10,0	58,4
Total	513	156	668

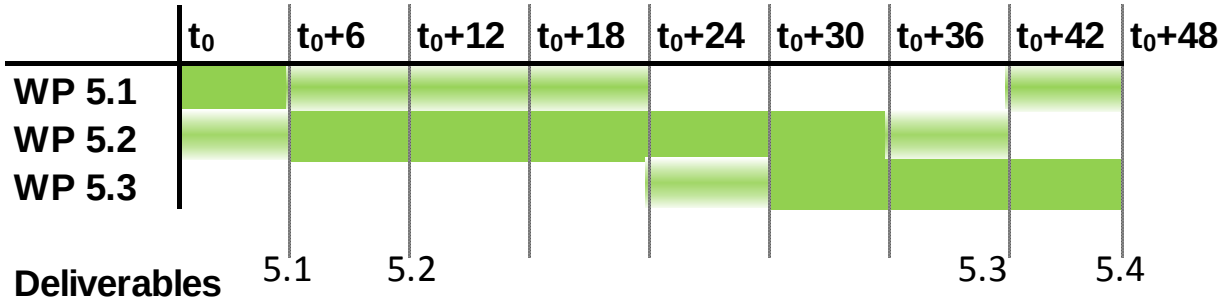

Generics

- Early milestones require early kick-off (January 2013)
- Study industry involvement where possible
- Project cost based on staff effort
  - try to invoke (PhD) students in the programme
- Try to define a good role for Hungarian Partner

Deliverables

#	Deliverable	WP	Delivery Month
5.1	Active Freeform Optical Critical Component Development Specification	5.1	6
5.2	Actuator and Metrology Design Report	5.2	12
5.3	Active Freeform System Demonstrator	5.3	40
5.4	Active Freeform Mirror Final Report	5.4	48

Timing major OPTICON milestones …?

De-risking

- Common goal project
- Sub-targets are important as well:
  - Active structures will work with any face-sheet
  - Economic stable mechanisms are widely applicable
  - Face sheet production technology will not always need active adjustment

End